copley controls AccelNet Plus Panel CANopen

BPL

RoHS CE

DIGITAL SERVO DRIVE FOR BRUSH & BRUSHLESS MOTORS

DIGITAL SERVO DRIVE
FOR BRUSHLESS/BRUSH MOTORS

CANopen®

CONTROL MODES
- Profile Position-Velocity-Torque, Interpolated Position, Homing
- Camming, Gearing
- Indexer

COMMAND INTERFACE
- CANopen
- ASCII and discrete I/O
- Stepper commands
- ±10V position/velocity/torque
- PWM velocity/torque command
- Master encoder (Gearing/Camming)

COMMUNICATIONS
- CANopen
- RS-232

FEEDBACK

Incremental Encoders
- Digital quad A/B
  Analog Sin/Cos
  Panasonic Incremental A Format
- Aux. quad A/B encoder / encoder out

Absolute Encoders
- SSI, EnDat, Absolute A,
  Tamagawa & Panasonic Absolute A
  Sanyo Denki Absolute A, BiSS (B & C)

Resolver (-R option)
- Brushless Resolver

Other
- Digital Halls

I/O DIGITAL
- 6 High-speed inputs
- 1 Motor over-temp input
- 4 Opto-Isolated inputs
- 3 Opto-Isolated outputs
- 1 Opto-Isolated brake output

I/O ANALOG
- 1 Reference Input, 12-bit

SAFE TORQUE OFF (STO)
- SIL 3, Category 3, PL d

DIMENSIONS: IN [MM]
- 5.08 x 3.41 x 1.99 [129 x 86.6 x 50.4]
- 5.08 x 3.41 x 3.39 [129 x 86.6 x 86.1] with heatsink

Model	Ip	Ic	Vdc
BPL-090-06	6	3	90
BPL-090-14	14	7	90
BPL-090-30	30	15	90

Add -R for resolver feedback option

DESCRIPTION

The BPL is a high-performance, DC powered drive for position, velocity, and torque control of brushless and brush motors via CANopen. Drive commissioning is fast and simple using CME 2™ software operating under Windows® and communicating with the BPL via RS-232.

The BPL operates as a CANopen DS-402 node. Supported modes include: Profile Position-Velocity-Torque, Interpolated Position Mode (PVT), and Homing.

Feedback from both incremental and absolute encoders is supported. A multi-mode encoder port functions as an input or output depending on the drive's basic setup.

There are seven non-isolated inputs. All inputs have programmable active levels. Three opto-isolated outputs [OUT1~3] have individual +/- connections. An isolated MOSFET brake output [OUT4] is programmable to drive motor brakes or other functions and has a flyback diode to the Brake 24V input for driving inductive loads. Drive power is transformer-isolated DC from regulated or unregulated power supplies. An AuxHV input is provided for "keep-alive" operation permitting the drive power stage to be completely powered down without losing position information, or communications with the control system.

GENERAL SPECIFICATIONS

Test conditions: Load = Wye connected load: 2 mH + 2 Ω line-line. Ambient temperature = 25°C, +HV = HV_{max}

MODEL	BPL-090-06	BPL-090-14	BPL-090-30	
OUTPUT POWER				
Peak Current	6 (4.24)	14 (9.9)	30 (21.2)	Adc (Arms-sine), ±5%
Peak time	1			Sec
Continuous current (Note 1)	3 (2.1)	7 (5)	15 (10.6)	Adc (Arms-sine) per phase
INPUT POWER				
HVmin~HVmax	+14 to +90	+14 to +90	+14 to +90	Vdc Transformer-isolated
Ipeak	6	14	30	Adc (1 sec) peak
Icont	3	7	15	Adc continuous
Aux HV	+14 to +90 Vdc, 3 W (Typ, no load on encoder +5V output), 6 W, (Max, encoder +5V @ 500 mA)			Optional, not required for operation

DIGITAL CONTROL		
Digital Control Loops	Current, velocity, position. 100% digital loop control	
Sampling rate (time)	Current loop: 16 kHz (62.5 µs), Velocity & position loops: 4 kHz (250 µs)	
Bus voltage compensation	Changes in bus or mains voltage do not affect bandwidth	
Minimum load inductance	200 µH line-line	
COMMAND INPUTS (NOTE: DIGITAL INPUT FUNCTIONS ARE PROGRAMMABLE)		
Distributed Control Modes		
CANopen DS-402	Profile Position-Velocity-Torque, Interpolated Position, Homing	
Stand-alone mode		
Analog torque, velocity, position reference	±10 Vdc, 12-bit resolution	Dedicated differential analog input
Digital position reference	Pulse/Direction, CW/CCW	Stepper commands (2 MHz maximum rate)
	Quad A/B Encoder	2 M line/sec, 8 Mcount/sec (after quadrature)
Digital torque & velocity reference	PWM , Polarity	PWM = 0% - 100%, Polarity = 1/0
	PWM 50%	PWM = 50% ±50%, no polarity signal required
	PWM frequency range	1 kHz minimum, 100 kHz maximum
	PWM minimum pulse width	220 ns
Indexing	Up to 32 sequences can be launched from inputs or ASCII commands.	
Camming	Up to 10 CAM tables can be stored in flash memory	
ASCII	RS-232, DTE, 9600~115,200 Baud, 3-wire, RJ-11 connector	

DIGITAL INPUTS	
Number	11
[IN1,2]	Digital, non-isolated, Schmitt trigger, 1 µs RC filter, 24 Vdc compatible, programmable pull-up/down to +5 Vdc/ground, Vt+ = 2.5~3.5 Vdc, VT- = 1.3~2.2 Vdc, VH = 0.7~1.5 Vdc
[IN3,4,5,6]	Digital, non-isolated, programmable as single-ended or differential pairs, 100 ns RC filter, 12 Vdc max, 10 kΩ programmable pull-up/down per input to +5 Vdc/ground, SE: Vin-LO ≤ 2.3 Vdc, Vin-HI ≥ 2.7 Vdc, VH = 45 mV typ, DIFF: Vin-LO ≤ 200 mVdc, Vin-HI ≥ 200 mVdc, VH = 45 mV typ,
[IN7,8,9,10]	Digital, opto-isolated, single-ended, ±15~30 Vdc compatible, bi-polar, with common return Rated impulse ≥ 800 V, Vin-LO ≤ 6.0 Vdc, Vin-HI ≥ 10.0 Vdc, Input current ±3.6 mA @ ±24 Vdc, typical
[IN11]	Defaults as motor overtemp input on feedback connector, 12 Vdc max, programmable to other functions Other digital inputs are also programmable for the Motemp function 330 µs RC filter, 4.99k pullup to +5 Vdc, Vt+ = 2.5~3.5 Vdc, VT- = 1.3~2.2 Vdc, VH = 0.7~1.5 Vdc
Functions	All inputs are programmable, [IN1] defaults to the Enable function and is programmable for other functions.

ANALOG INPUTS	
Number	1
[AIN1]	Differential, ±10 Vdc, 5 kΩ input impedance, 12-bit resolution

SAFE TORQUE OFF (STO)	
Function	PWM outputs are inactive and current to the motor will not be possible when the STO function is asserted
Standard	Designed to IEC-61508-1, IEC-61508-2, IEC-61800-5-2, ISO-13849-1
Safety Integrity Level	SIL 3, Category 3, Performance level d
Inputs	2 two-terminal: STO-IN1+,STO-IN1-, STO-IN2+, STO-IN2-
Type	Opto-isolators, 24V compatible, Vin-LO ≤ 6.0 Vdc or open, Vin-HI ≥ 15.0 Vdc,
Input current (typical)	STO-IN1: 9.0 mA, STO-IN2: 4.5 mA
Response time	2 ms (IN1, IN2) from Vin ≤6.0 Vdc to interruption of energy supplied to motor
Reference	***Complete information and specifications are in the Accelnet & Stepnet Plus Panels STO Manual***

DIGITAL OUTPUTS	
Number	4
[OUT1~3]	Opto-isolated SSR, two-terminal, 300 mA max, 24 V tolerant, Rated impulse ≥ 800 V, series 1 Ω resistor
[OUT4]	Opto-isolated MOSFET, default as motor brake control, current-sinking, 1 Adc max, flyback diodes to +24 V external power supply for driving inductive loads Programmable for other functions if not used for brake

RS-232 PORT	
Signals	RxD, TxD, Gnd in 6-position, 4-contact RJ-11 style modular connector, non-isolated, common to Signal Ground
Mode	Full-duplex, DTE serial communication port for drive setup and control, 9,600 to 115,200 Baud
Protocol	Binary and ASCII formats

CAN PORT	
Signals	CANH, CANL, CAN_GND in 8-position dual RJ-45 style modular connector, wired as per CAN Cia DR-303-1, V1.1
Format	CAN V2.0b physical layer for high-speed connections compliant
Data	CANopen Device Profile DSP-402
Node-ID selection	16 position rotary switches on front panel with 3 additional Node-ID bits available as digital inputs or programmable to flash memory (7-bit addressing, 127 nodes per CAN network)

NOTES:
1) Heatsink or forced-air is required for continuous current rating.

GENERAL SPECIFICATIONS

DC POWER OUTPUT		
Number	1	
Ratings	+5 Vdc, 500 mA max, thermal and short-circuit protected	
Connections	The combined current from Feedback J6-6,17 and Control J1-17,32 cannot exceed 500 mA	
INDICATORS		
AMP	Bicolor LED, drive state indicated by color, and blinking or non-blinking condition	
RUN	Green LED, status of CANopen finite-state-automaton (FSA)	
ERR	Red LED, shows errors due to time-outs, unsolicited state changes, or local errors	
L/A	Green LED, Link/Act, shows the state of the physical link and activity on the link (CANopen connection)	
	RUN, ERR, and L/A LED colors and blink codes conform to ETG.1300 S(R) V1.1.0	
PROTECTIONS		
HV Overvoltage	+HV > 90 Vdc	Drive outputs turn off until +HV < 90 Vdc
HV Undervoltage	+HV < +14 Vdc	Drive outputs turn off until +HV > +14 Vdc
Drive over temperature	Heat plate > 70°C.	Drive outputs turn off
Short circuits	Output to output, output to ground, internal PWM bridge faults	
I^2T Current limiting	Programmable: continuous current, peak current, peak time	
Motor over temperature	Digital input programmable to detect motor temperature switch	
Feedback Loss	Inadequate analog encoder or resolver signal amplitude or missing incremental encoder signals	
MECHANICAL & ENVIRONMENTAL		
Size	5.08 [129], 3.41 [86.6], 1.74 [44.1] without heatsink	
	5.08[129] x 3.41[86.6] x 3.39[86] in[mm] with heatsink	
Weight	0.75[0.34] lb[kg] without heatsink,	
	1.70[0.77] lb[kg] with heatsink	
Ambient temperature	0 to +45C operating, -40 to +85C storage	
Humidity	0 to 95%, non-condensing	
Vibration	2 *g* peak, 10~500 Hz (sine), IEC60068-2-6	
Shock	10 *g*, 10 ms, half-sine pulse, IEC60068-2-27	
Contaminants	Pollution degree 2	

AGENCY STANDARDS CONFORMANCE

tandards and Directives

Functional Safety

IEC 61508-1:2010, IEC 61508-2:2010, IEC 61508-3:2010, IEC 61508-4: 2010 (SIL 3)

Directive 2006/42/EC (Machinery)

ISO 13849-1/Cor. 1:2009 (Cat 3, PL d)

IEC 61800-5-2:2007 (SIL3)

(see the Xenus Plus Dual Axis STO Manual for further details)

Product Safety

Directive 2006/95/EC (Low Voltage)

IEC 61800-5-1:2007

EMC

Directive 2004/108/EC (EMC)

IEC 61800-3:2004/A1:2011

Restriction of the Use of Certain Hazardous Substances (RoHS)

Directive 2011/65/EU (RoHS II)

Approvals

UL and cUL recognized component to:

UL 61800-5-1, 1st Ed.

TÜV SÜD Functional Safety to:

IEC 61508-1:2010, IEC 61508-2:2010, IEC 61508-3:2010, IEC 61508-4: 2010 (SIL 3)

ISO 13849-1/Cor. 1:2009 (Cat 3, PL d)

GENERAL SPECIFICATIONS

FEEDBACK	
Incremental:	
Digital Incremental Encoder	Quadrature signals, (A, /A, B, /B, X, /X), differential (X, /X Index signals not required) 5 MHz maximum line frequency (20 M counts/sec) MAX3097 differential line receiver with 121 Ω terminating resistor between A & /A, B & /B inputs X & /X inputs have 130 Ω terminating resistor, S & /S inputs have 221 Ω terminating resistor X & S inputs have 1 kΩ pull-ups to +5V, /X & /X inputs have 1 kΩ pull-down to ground
Analog Incremental Encoder	Sin/cos format (sin+, sin-, cos+, cos-), differential, 1 Vpeak-peak, ServoTube motor compatible, BW > 300 kHz, 121 Ω terminating resistor between complementary inputs Digital Index (X, /X) input
Absolute:	
SSI	Clock (X, /X), Data (S, /S) signals, 4-wire, clock output from BPL, data returned from encoder
EnDat	Clock (X, /X), Data (S, /S), sin/cos (sin+, sin-, cos+, cos-) signals
Absolute A	Tamagawa Absolute A, Panasonic Absolute A Format, Sanyo Denki Absolute A SD+, SD- (S, /S) signals, 2.5 or 4 MHz, 2-wire half-duplex communication Status data for encoder operating conditions and errors
BiSS (B&C)	MA+, MA- (X, /X), SL+, SL- (S, /S) signals, 4-wire, clock output from BPL, data returned from encoder
DIGITAL HALLS	
Type	Digital, single-ended, 120° electrical phase difference between U-V-W signals, Schmitt trigger, 1.5 µs RC filter, 24 Vdc compatible, 15k pull-up to +5 Vdc, Vt+ = 2.5~3.5 Vdc, VT- = 1.3~2.2 Vdc, VH = 0.7~1.5 Vdc
Inputs	15 kΩ pullups to +5 Vdc, 1.5 µs RC filter to Schmitt trigger inverters
MULTI-MODE ENCODER PORT	
As Input	Digital quadrature encoder (A, /A, B, /B, X, /X), 5 MHz maximum line frequency (20 M counts/sec), MAX3097 line receiver, 1.5 kΩ pull-ups to +5V on X & S inputs, 1.5 kΩ pull-downs to Sgnd on /X & /S inputs Digital absolute encoder (Clk, /Clk, Dat, /Dat) half or full-duplex operation, S & X inputs are used for absolute encoder interface
As Emulated Output	Quadrature encoder emulation with programmable resolution to 4096 lines (65,536 counts) per rev from analog sin/cos encoders or resolvers, or absolute encoders A, /A, B, /B, from MAX3032 differential line driver, X, /X, S, /S from MAX3362 differential line driver
As Buffered Output	Digital A/B/X encoder feedback signals from primary quad encoder are buffered (see line drivers above)
RESOLVER (-R OPTION)	
Type	Brushless, single-speed, 1:1 to 2:1 programmable transformation ratio
Resolution	14 bits (equivalent to a 4096 line quadrature encoder)
Reference frequency	8.0 kHz
Reference voltage	2.8 Vrms max, auto-adjustable by the drive to adjust sin/cos signals to 2.0 Vrms
Reference maximum current	100 mA
Maximum RPM	10,000 typical
Sin/Cos inputs	Differential, 54kΩ ±1% differential impedance, 2.0 Vrms, BW ≥ 300 kHz

CANOPEN COMMUNICATIONS

Based on the CAN V2.0b physical layer, a robust, two-wire communication bus originally designed for automotive use where low-cost and noise-immunity are essential, CANopen adds support for motion-control devices and command synchronization. The result is a highly effective combination of data-rate and low cost for multi-axis motion control systems. Device synchronization enables multiple axes to coordinate moves as if they were driven from a single control card.

CANOPEN CONNECTIONS

Accelnet Plus uses the CAN physical layer signals CAN_H, CAN_L, and CAN_GND for connection, and CANopen protocol for communication. Before installing the drive in a CAN network, it must be assigned a CAN Node-ID (address). A maximum of 127 CAN nodes are allowed on a single CAN bus.

CANOPEN LEDS (ON RJ-45 CONNECTORS)

RUN Green: Shows the state of the FSA (Finite State Automaton)

Off	=	Init
Blinking	=	Pre-operational
Single-flash	=	Safe-operational
On	=	Operational

ERR Red: Shows errors such as watchdog timeouts and unsolicited state changes in the BPL due to local errors.

Off	=	CANopen communications are working correctly
Blinking	=	Invalid configuration, general configuration error
Single Flash	=	Local error, slave has changed CANopen state autonomously
Double Flash	=	PDO or CANopen watchdog timeout,or an application watchdog timeout has occurred

L/A Green: Shows the state of the physical link and activity on the link.
A green LED indicates the state of the CANopen network:

LED	Link	Activity	Condition
ON	Yes	No	Port Open
Flickering	Yes	Yes	Port Open with activity
Off	No	(N/A)	Port Closed

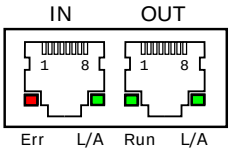

J3: CANopen PORTS
RJ-45 receptacles,
8 position, 4 contact

PIN	SIGNAL
8	CAN_V+
7	GND
6	CAN_SHLD
5	THRU
4	THRU
3	CAN_GND
2	CAN_L
1	CAN_H

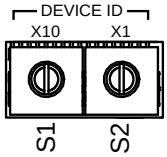

CANopen DEVICE ID (NETWORK ADDRESS)

In a CANopen network, nodes are assigned Node-IDs 1~127. Node-ID 0 is reserved for the CAN bus master. In the BPL, the node address is provided by two 16-position rotary switches with hexadecimal encoding. These can set the address of the drive from 0x01~0x7F (1~127 decimal). The chart shows the decimal values of the hex settings of each switch. In the BPL, this is provided by two 16-position rotary switches with hexadecimal encoding. These can set the Device ID of the drive from 0x00~0xFF (0~255 decimal). The chart shows the decimal values of the hex settings of each switch.

Example 1: Find the switch settings for decimal Device ID 107:

1) Find the highest number in the x10 column that is less than 107 and set x10 to the hex value in the same row:
   96 < 107 and 112 > 107, so x10 = 96 = Hex 6
2) Subtract 96 from the desired Device ID to get the decimal value for the switch x1 and set it to the Hex value in the same row:
   x1 = (107 - 96) = 11 = Hex B
3) Result: X10 = 6, X1 = B, Alias = 0x6B (107)

CANopen Device ID Switch
Decimal values

Set	x10	x1
Hex	Dec	
0	0	0
1	16	1
2	32	2
3	48	3
4	64	4
5	80	5
6	96	6
7	112	7

Set	x10	x1
Hex	Dec	
8	128	8
9	144	9
A	160	10
B	176	11
C	192	12
D	208	13
E	224	14
F	240	15

INDICATORS: DRIVE STATE

Two bi-color LEDs give the state of the BPL drive. Colors do not alternate, and can be solid ON or blinking. When multiple conditions occur, only the top-most condition will be displayed. When that condition is cleared the next one below will shown.

1) Red/Blinking	=	Latching fault. Operation will not resume until drive is Reset.
2) Red/Solid	=	Transient fault condition. Drive will resume operation when the condition causing the fault is removed.
3) Green/Double-Blinking	=	STO circuit active, drive outputs are Safe-Torque-Off
4) Green/Slow-Blinking	=	Drive OK but NOT-enabled. Will run when enabled.
5) Green/Fast-Blinking	=	Positive or Negative limit switch active. Drive will only move in direction not inhibited by limit switch.
7) Green/Solid	=	Drive OK and enabled. Will run in response to reference inputs or CANopen commands.

Latching Faults

Defaults
- Short circuit (Internal or external)
- Drive over-temperature
- Motor over-temperature
- Feedback Error
- Following Error

Optional (programmable)
- Over-voltage
- Under-voltage
- Motor Phasing Error
- Command Input Fault

AMP LED &
DEVICE ID
SWITCHES

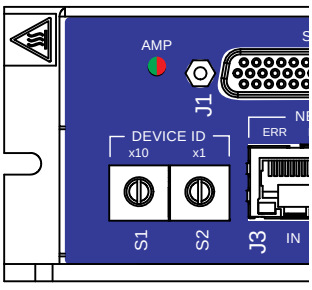

COMMUNICATIONS: RS-232 SERIAL

BPL is configured via a three-wire, full-duplex DTE RS-232 port that operates from 9600 to 115,200 Baud, 8 bits, no parity, and one stop bit. Signal format is full-duplex, 3-wire, DTE using RxD, TxD, and Gnd. Connections to the *BPL* RS-232 port are through J2, an RJ-11 connector. The *BPL* Serial Cable Kit (SER-CK) contains a modular cable, and an adapter that connects to a 9-pin, Sub-D serial port connector (COM1, COM2, etc.) on PC's and compatibles.

After power-on, reset, or transmission of a Break character, the Baud rate will be 9,600. Once communication has been established at this speed, the Baud rate can be changed to a higher rate (19,200, 57,600, 115,200).

SER-CK SERIAL CABLE KIT

The SER-CK provides connectivity between a D-Sub 9 male connector and the RJ-11 connector on the BPL. It includes an adapter that plugs into the COM1 (or other) port of a PC and uses common modular cable to connect to the BPL. The connections are shown in the diagram BPLow.

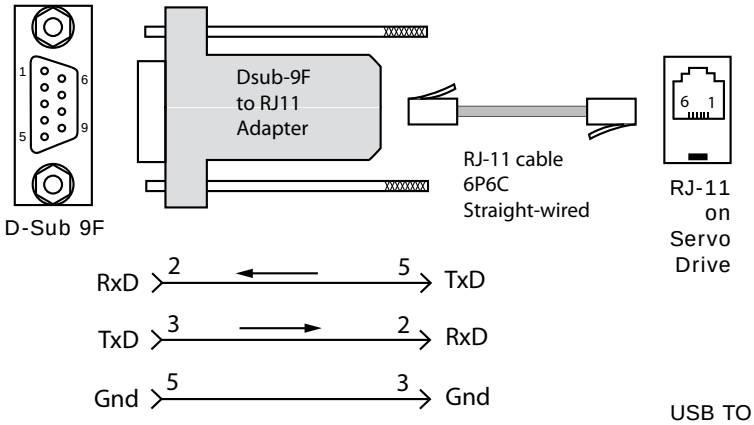

J2: RS-232 PORT

RJ-11 receptacle,
6 position, 4 contact

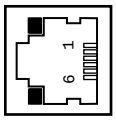

PIN	SIGNAL
2	RxD
3,4	Gnd
5	Txd

Don't forget to order a Serial Cable Kit SER-CK when placing your order for a BPL!

USB TO RS-232 ADAPTERS

These may or may not have the speed to work at the 115,200 Baud rate which gives the best results with CME2. Users have reported that adapters using the FTDI chipset work well with CME2

ASCII COMMUNICATIONS

The Copley ASCII Interface is a set of ASCII format commands that can be used to operate and monitor Copley Controls Accelnet, Stepnet, and BPL series amplifiers over an RS-232 serial connection. For instance, after basic amplifier configuration values have been programmed using CME 2, a control program can use the ASCII Interface to:

- Enable the amplifier in Programmed Position mode.
- Home the axis.
- Issue a series of move commands while monitoring position, velocity, and other run-time variables.

The Baud rate defaults to 9,600 after power-on or reset and is programmable up to 115,200 thereafter.
After power-on, reset, or transmission of a Break character, the Baud rate will be 9,600. Once communication has been established at this speed, the Baud rate can be changed to a higher rate (19,200, 57,600, 115,200).
ASCII parameter 0x90 holds the Baud rate data. To set the rate to 115,200 enter this line from a terminal:

```
s r0x90 115200 <enter>
```

Then, change the Baud rate in the computer/controller to the new number and communicate at that rate.

Additional information can be found in the ASCII Programmers Guide on the Copley website:
http://www.copleycontrols.com/Motion/pdf/ASCII_ProgrammersGuide.pdf

SAFE TORQUE OFF (STO)

The BPL provides the Safe Torque Off (STO) function as defined in IEC 61800-5-2. Two channels are provided which, when de-energized, prevent the upper and lower devices in the PWM outputs from being operated by the digital control core.

This provides a positive OFF capability that cannot be overridden by the control firmware, or associated hardware components. When the opto-couplers are energized (current is flowing in the input diodes), the control core will be able to control the on/off state of the PWM outputs.

INSTALLATION

DANGER	***Refer to the Accelnet & Stepnet Plus Panels STO Manual***
	The information provided in the *Accelnet & Stepnet Plus Panels STO Manual* must be considered for any application using the BPL drive's STO feature. ***FAILURE TO HEED THIS WARNING CAN CAUSE EQUIPMENT DAMAGE, INJURY, OR DEATH.***

STO BYPASS (MUTING)

In order for the PWM outputs of the BPL to be activated, current must be flowing through all of the opto-couplers that are connected to the STO-IN1 and STO-IN2 terminals of J4, and the drive must be in an ENABLED state. When the opto-couplers are OFF, the drive is in a Safe Torque Off (STO) state and the PWM outputs cannot be activated by the control core to drive a motor.

This diagram shows connections that will energize all of the opto-couplers from an internal current-source. When this is done the STO feature is overridden and control of the output PWM stage is under control of the digital control core.
If not using the STO feature, these connections must be made in order for the BPL to be enabled.

FUNCTIONAL DIAGRAM

Current must flow through all of the opto-couplers before the drive can be enabled

* STO bypass connections on the BPL and Xenus XEL-XPL models are different. If both drives are installed in the same cabinet, the diode should be wired as shown to prevent damage that could occur if the STO bypass connectors are installed on the wrong drive. The diode is not required for STO bypass on the BPL and can be replaced by a wire between pins 7 and 9.

STO BYPASS CONNECTIONS

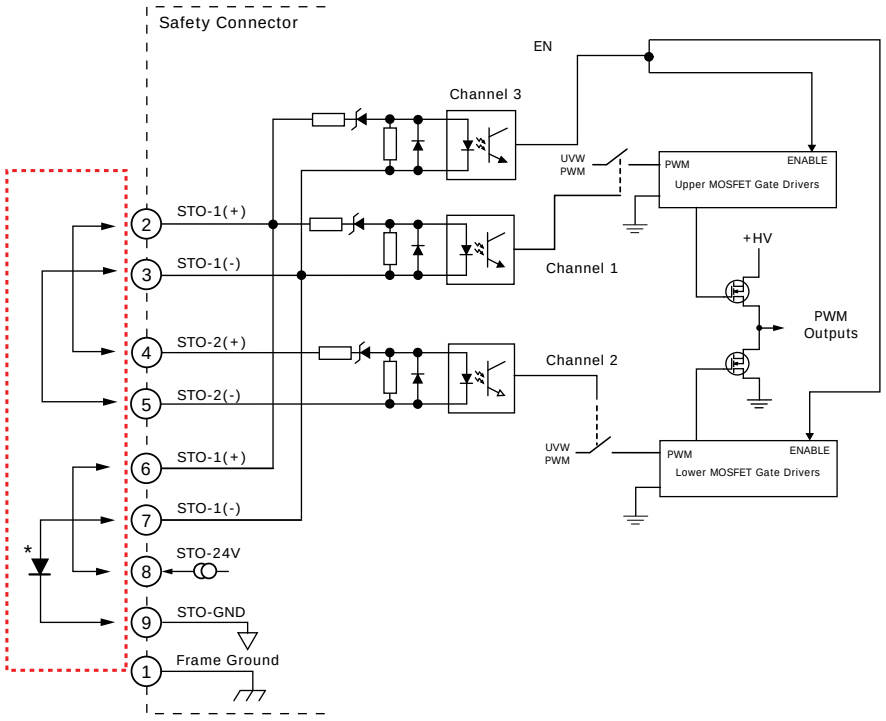

SAFETY CONNECTOR J4

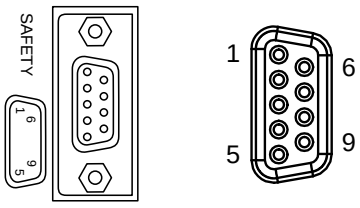

CONNECTIONS

PIN	SIGNAL	PIN	SIGNAL
1	Frame Gnd	6	STO-1(+)
2	STO-1(+)	7	STO-1(-)
3	STO-1(-)	8	STO-24V
4	STO-2(+)	9	STO-GND
5	STO-2(-)		

DIGITAL COMMAND INPUTS: POSITION

POSITION COMMAND INPUTS

Single-ended digital position commands must be sourced from devices with active pull-up and pull-down to take advantage of the high-speed inputs.

For differential commands, the A & B channels of the multi-mode encoder ports are used.

SINGLE-ENDED PULSE & DIRECTION

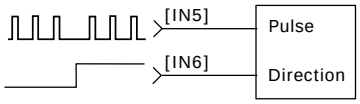

DIFFERENTIAL PULSE & DIRECTION

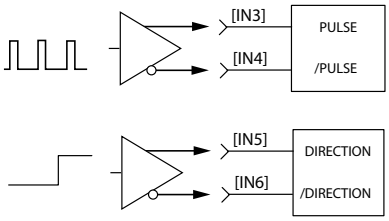

SINGLE-ENDED: IN5, 6

Signal	J1 Pins
[IN5] Pls, CU, Enc A	11
[IN6] Dir, CD, Enc B	12
Signal Ground	6,16,22,31, 37,44
Frame Ground	1

SINGLE-ENDED CU/CD

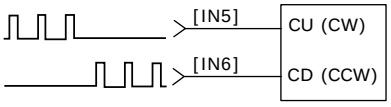

DIFFERENTIAL CU/CD

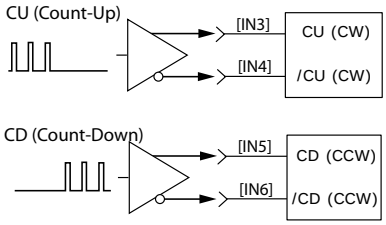

DIFFERENTIAL: IN3,4,5,6

Signal	J1 Pins
[IN3] Pls, CU, Enc A	9
[IN4] /Pls, /CU, Enc /A	10
[IN5] Dir, CD, Enc B	11
[IN6] /Dir, /CD, Enc /B	12
Signal Ground	6,16,22,31, 37,44
Frame Ground	1

QUAD A/B ENCODER SINGLE-ENDED

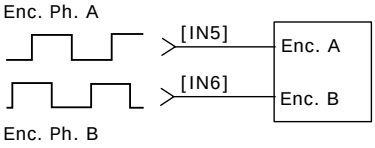

QUAD A/B ENCODER DIFFERENTIAL

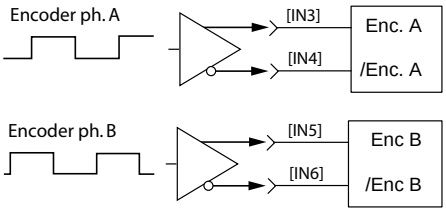

DIGITAL COMMAND INPUTS: VELOCITY, TORQUE

Single-ended digital torque or velocity commands must be sourced from devices with active pull-up and pull-down to take advantage of the high-speed inputs.

For differential commands, the A & B channels of the multi-mode encoder ports are used.

SINGLE-ENDED PWM & DIRECTION

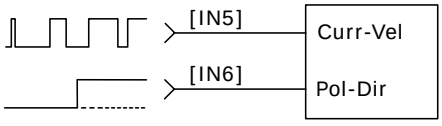

DIFFERENTIAL PWM & DIRECTION

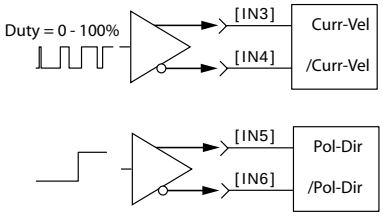

SINGLE-ENDED: IN3, 4

Signal	J1 Pins
[IN5] Curr-Vel±	11
[IN6] Pol-Dir	12
Sgnd	6,16,22,31, 37,44
Frame Ground	1

SINGLE-ENDED 50% PWM

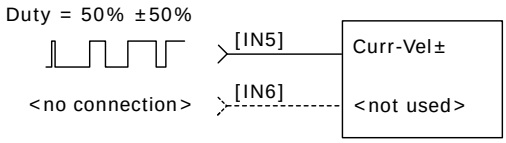

DIFFERENTIAL 50% PWM

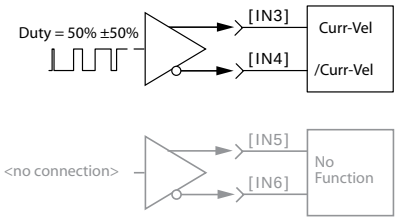

DIFFERENTIAL: IN

Signal	J1 Pins
[IN3] Curr-Vel±	9
[IN4] / Curr-Vel±	10
[IN5] Pol-Dir	11
[IN6] /Pol-Dir	12
Signal Ground	6,16,22,31, 37,44
Frame Ground	1

MULTI-MODE PORT AS AN INPUT

INPUT TYPES

POSITION COMMAND INPUTS: DIFFERENTIAL

- Pulse & Direction
- CW & CCW (Clockwise & Counter-Clockwise)
- Encoder Quad A & B
- Camming Encoder A & B input

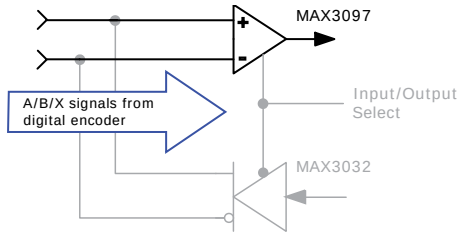

CURRENT or VELOCITY COMMAND INPUTS: DIFFERENTIAL

- Current or Velocity & Direction
- Current or Velocity (+) & Current or Velocity (-)

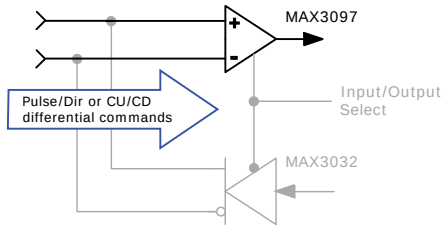

SECONDARY FEEDBACK: INCREMENTAL

- Quad A/B/X incremental encoder

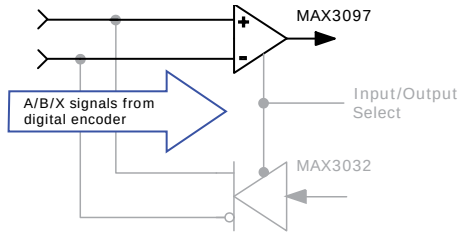

SECONDARY FEEDBACK: ABSOLUTE

- S channel: Absolute A encoders (2-wire)
  The S channel first sends a Clock signal and then receives Data from the encoder in half-duplex mode.
- S & X channels: SSI, BiSS, EnDat encoders (4-wire)
  The X channel sends the Clock signal to the encoder, which initiates data transmission from the encoder on the S-channel in full-duplex mode

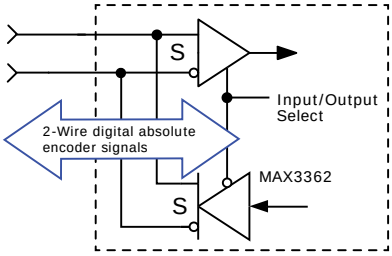

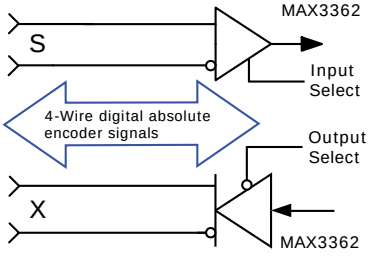

SIGNALS & PINS

Signal	J1
Pulse, CW, Encoder A	36
/Pulse, /CW, Encoder /A	21
Direction, CCW, Encoder B	35
/Direction, /CCW, Encoder /B	20
Quad Enc X, Absolute Clock	34
Quad Enc /X, /Absolute Clock	19
Enc S, Absolute (Clock) Data	33
Enc /S, / Absolute (Clock) Data	18
Signal Ground	6, 16, 22, 31, 37, 44
Frame Ground	1

J1 Multi-Port

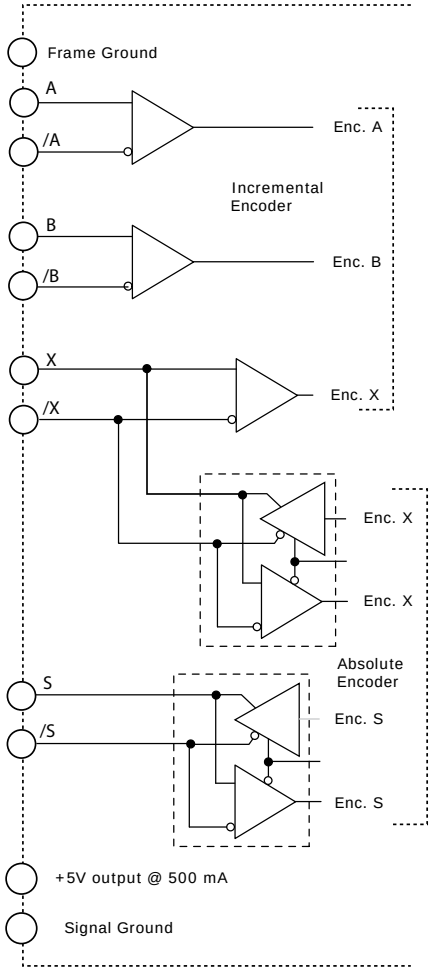

MULTI-MODE PORT AS AN OUTPUT

OUTPUT TYPES

BUFFERED FEEDBACK OUTPUTS: DIFFERENTIAL

- Encoder Quad A, B, X channels
- Direct hardware connection between quad A/B/X encoder feedback and differential line drivers for A/B/X outputs

EMULATED FEEDBACK OUTPUTS: DIFFERENTIAL

Firmware produces emulated quad A/B signals from feedback data from the following devices:

- Absolute encoders
- Resolvers (-R option)
- Analog Sin/Cos incremental encoders

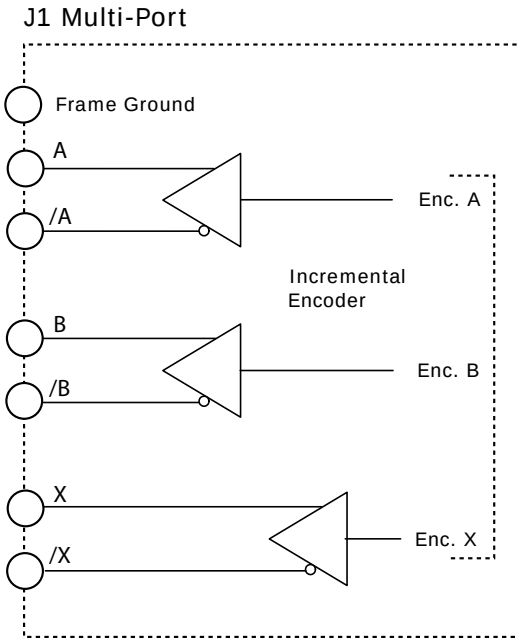

SIGNALS & PINS

Signal	J1
Encoder A	36
Encoder /A	21
Encoder B	35
Encoder /B	20
Encoder X	34
Encoder /X	19
Encoder S	33
Encoder /S	18
Signal Ground	6, 16, 22, 31, 37, 44
Frame Ground	1

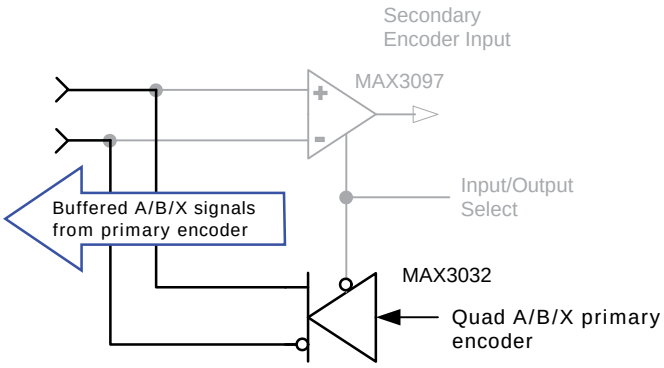

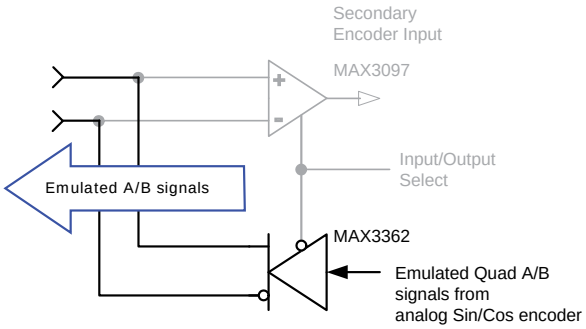

CME2 DEFAULTS

These tables show the CME2 default settings. They are user-programmable and the settings can be saved to non-volatile flash memory.

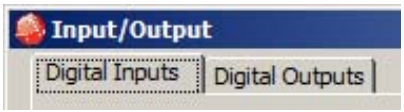

Name	Config	PU/PD
IN1	Enable-LO	+5V or Sgnd
IN2	Not Configured	
IN3	SE(DIFF) Not Configured	
IN4		
IN5	SE(DIFF) Not Configured	
IN6		
IN7	Opto Not Configured	
IN8		
IN9		
IN10		
IN11	Motemp	+5V

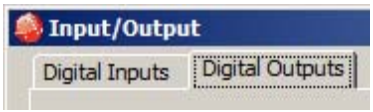

Name	Notes
OUT1	Fault Active-OFF
OUT3	Not Configured
OUT4	
OUT5	
OUT6	Brake Active-HI

Name	Notes
Analog: Reference Filter	Disabled
Vloop: Input Filter	Disabled
Vloop: Output Filter 1	Low Pass, Butterworth, 2-pole, 200 Hz
Vloop: Output Filter 2	Disabled
Vloop: Output Filter 3	Disabled
Iloop: Input Filter 1	Disabled
Iloop: Input Filter 2	Disabled
Input Shaping	Disabled

Active	Notes
√	Short Circuit
√	Amp Over Temp
√	Motor Over Temp
	Over Voltage
	Under Voltage
	Motor Wiring Disconnected

OPTIONAL FAULTS

	Over Current (Latched)

Option	Notes
Method	Set Current Position as Home

HIGH SPEED INPUTS: IN1, IN2

- Digital, non-isolated, high-speed
- Progammable pull-up/pull-down
- 24V Compatible
- Programmable functions

SPECIFICATIONS

Input	Data	Notes
Input Voltages	HI	VT+ = 2.5~3.5 Vdc
	LO	VT- = 1.3~2.2 Vdc
	VH[1]	VH = ±0.7~1.5 Vdc
	Max	+30 Vdc
	Min	0 Vdc
Pull-up/down	R1	15 kΩ
Low pass filter	R2	15 kΩ
	C1	100 pF
Input Current	24V	1.3 mAdc
	0V	-0.33 mAdc
Time constant	RC[2]	1.5 µs

CONNECTIONS

Input	Pin
IN1	J1-7
IN2	J1-8
Sgnd	J1-6, 16, 22, 31, 37, 44

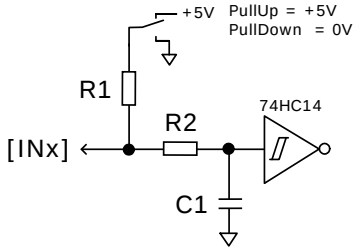

Notes:
1) VH is hysteresis voltage (VT+) - (VT-)
2) The R2*C2 time constant applies when input is driven by active HI/LO devices

SINGLE-ENDED/DIFFERENTIAL INPUTS: IN3, IN4, IN5, IN6

- Digital, non-isolated, high-speed
- Progammable pull-up/pull-down
- 12V Compatible
- Single-ended or Differential
- Programmable functions

SPECIFICATIONS

Input	Data	Notes
Input Voltages Single-ended	HI	Vin ≥ 2.7 Vdc
	LO	Vin ≤ 2.3 Vdc
	VH[1]	45 mVdc typ
Input Voltages Differential[3]	HI	Vdiff ≥ +200 mVdc
	LO	Vdiff ≤ -200 mVdc
	VH	±45 mVdc typ
Common mode	Vcm	0 to +12 Vdc
Pull-up/down	R1	10 kΩ
Low pass filter	R2	1 kΩ
	C1	100 pF
Time constant	RC[2]	100 ns

Notes:
1) VH is hysteresis voltage IN2 - IN3 or IN12 - IN13
2) The R2*C2 time constant applies when input is driven by active HI/LO devices)
3) Vdiff = AINn(+) - AINn(-) n = 1 for Axis A, 2 for Axis B

CONNECTIONS

S.E.	DIFF	Pin
IN3	IN3+	J1-9
IN4	IN4-	J1-10
IN5	IN5+	J1-11
IN6	IN6-	J1-12
Sgnd		J1-6, 16, 22, 31, 37 , 44

SINGLE-ENDED

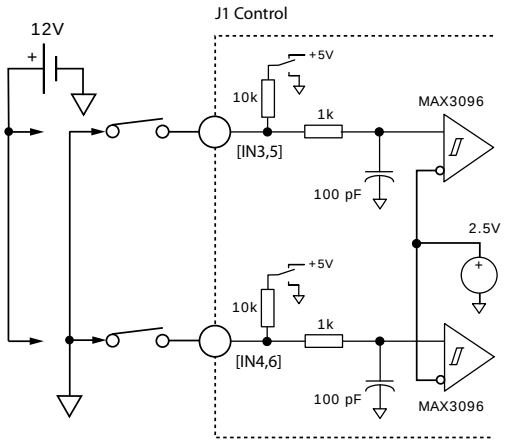

DIFFERENTIAL

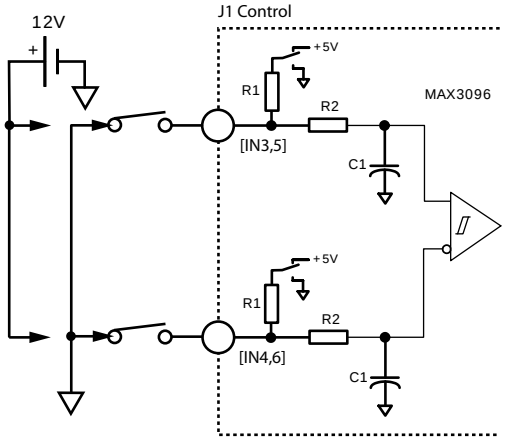

MOTOR OVERTEMP INPUT: IN11

- Digital, non-isolated
- Motor overtemp input
- 12V Compatible
- Programmable functions

MOTOR OVER TEMP INPUT

The 4.99k pull-up resistor works with PTC (positive temperature coefficient) thermistors that conform to BS 4999:Part 111:1987, or switches that open/close indicating a motor over-temperature condition. The active level is programmable.

SPECIFICATIONS

Input	Data	Notes
Input Voltages	HI	Vin ≥ 3.5 Vdc
	LO	Vin ≤ 0.7 Vdc
	Max	+12 Vdc
	Min	0 Vdc
Pull-up/down	R1	4.99 kΩ
Input Current	12V	1.4 mAdc
	0V	-1.0 mAdc
Low pass filter	R2	10 kΩ
	C1	33 nF
Time constant	Te	330 µs *

* RC time constant applies when input is driven by active high/low device

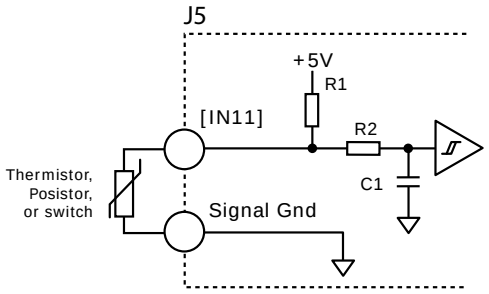

CONNECTIONS

Input	Pin
IN11	J6-7
Sgnd	J6-5, 16, 25, 26

BS 4999:Part 111:1987

Property	Ohms
Resistance in the temperature range 20°C to +70°C	60~750
Resistance at 85°C	≤1650
Resistance at 95°C	≥3990
Resistance at 105°C	≥12000

OPTO-ISOLATED INPUTS: IN7, IN8, IN9, IN10

- Digital, opto-isolated
- A group of four, with a common terminal
- Works with current sourcing or sinking drivers
- 24V Compatible
- Programmable functions

SPECIFICATIONS		
Input	Data	Notes
Input Voltages	HI	Vin ≥ ±10.0 Vdc *
	LO	Vin ≤ ±6 Vdc *
	Max	±30 Vdc *
Input Current	±24V	±3.6 mAdc
	0V	0 mAdc

* Vdc Referenced to ICOM terminals.

CONNECTIONS	
Signal	J1 Pin
IN7	13
IN8	14
IN9	15
IN10	30
ICOM	28

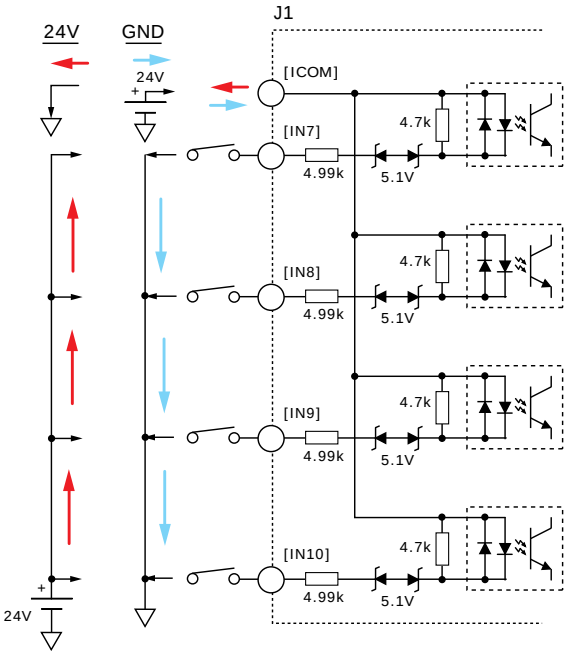

ANALOG INPUT: AIN1

- ±10 Vdc, differential
- 12-bit resolution
- Programmable functions

The analog input has a ±10 Vdc range at 12-bit resolution
As a reference input it take position/velocity/torque commands from a controller. If not used as a command input, it can be used as general-purpose analog input.

SPECIFICATIONS

Spec	Data	Notes
Input Voltage	Vref	±10 Vdc
Input Resistance	Rin	5.05 kΩ

CONNECTIONS

Signal	Pins
	Axis A
AIN(+)	J1-3
AIN(-)	J1-2
Sgnd	J1-6, 16, 22, 31, 37, 44

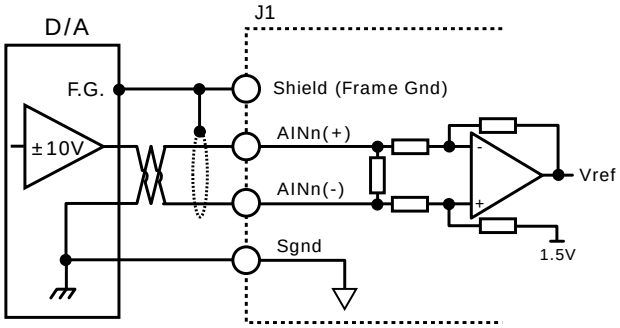

OPTO-ISOLATED OUTPUTS: OUT1, OUT2, OUT3

- Digital, opto-isolated
- SSR, 2-terminal
- Flyback diodes for inductive loads
- 24V Compatible
- Programmable functions

SPECIFICATIONS

Output	Data	Notes
ON Voltage OUT(+) - OUT(-)	Vdc	0.85V @ 300 mAdc
Output Current	Iout	300 mAdc max

CONNECTIONS

Signal	(+)	(-)
OUT1	J1-42	J1-27
OUT2	J1-41	J1-26
OUT3	J1-40	J1-25

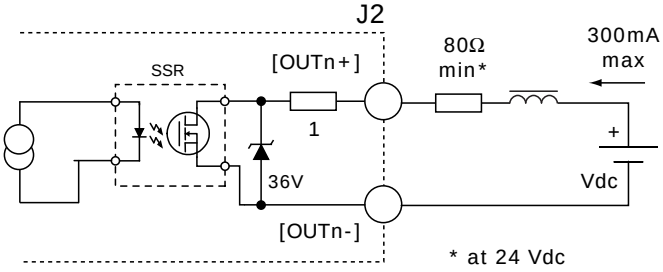

HI/LO DEFINITIONS: OUTPUTS

Input	State	Condition
OUT1~3	HI	Output SSR is ON, current flows
	LO	Output SSR is OFF, no current flows

OPTO-ISOLATED MOTOR BRAKE OUTPUT: OUT4

- Brake output
- Opto-isolated
- Flyback diode for inductive load
- 24V Compatible
- Connection for external 24V power supply
- Programmable functions

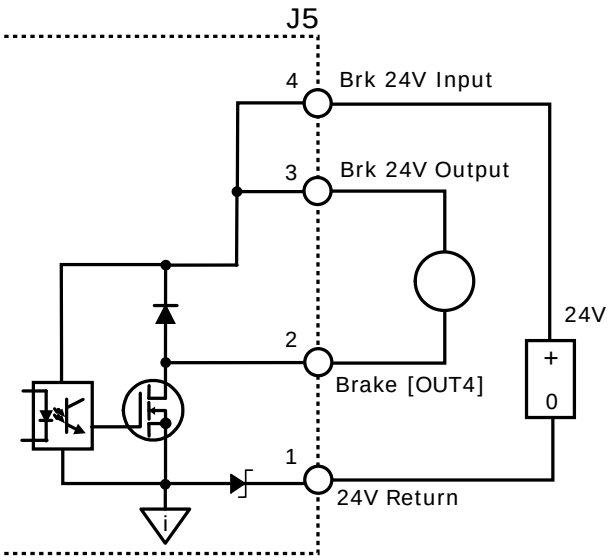

The brake circuits are optically isolated from all drive circuits and frame ground.

SPECIFICATIONS

Output	Data	Notes
Voltage Range	Max	+30 Vdc
Output Current	Ids	1.0 Adc

HI/LO DEFINITIONS: OUTPUTS

Input	State	Condition
BRAKE [OUT4]	HI	Output transistor is OFF Brake is un-powered and locks motor Motor cannot move Brake state is Active
	LO	Output transistor is ON Brake is powered, releasing motor Motor is free to move Brake state is NOT-Active

CME2 Default Setting for Brake Output [OUT4] is "Brake - Active HI"

Active = Brake is holding motor shaft (i.e. the *Brake is Active*)
Motor cannot move
No current flows in coil of brake
CME2 I/O Line States shows Output 4 as HI
BRK Output voltage is HI (24V), MOSFET is OFF
Servo drive output current is zero
Servo drive is disabled, PWM outputs are off

Inactive = Brake is not holding motor shaft (i.e. the *Brake is Inactive*)
Motor can move
Current flows in coil of brake
CME2 I/O Line States shows Output 4 as LO
BRK output voltage is LO (~0V), MOSFET is ON
Servo drive is enabled, PWM outputs are on
Servo drive output current is flowing

J5 CONNECTIONS

Pin	Signal
4	Brk 24V Input
3	Brk 24V Output
2	Brake [OUT4]
1	24V Return

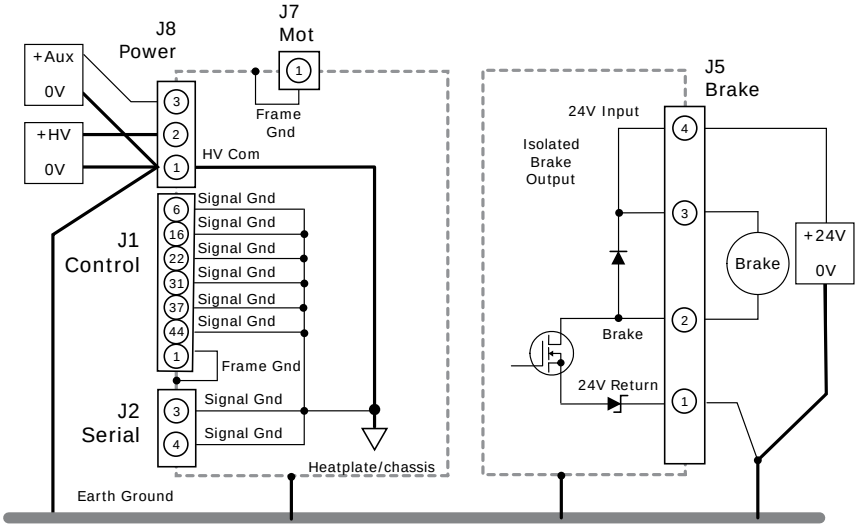

Earthing connections for power supplies should be as close as possible to elimimate potential differences between power supply 0V terminals.

This diagram shows the connections to the drive that share a common ground in the driver. If the brake 24V power supply is separate from the DC supply powering the drive, it is important that it connects to an earth or common grounding point with the HV power supply.

FEEDBACK CONNECTIONS

QUAD A/B/X ENCODER WITH SIGNAL LOSS DETECTION

Encoders with differential line-driver outputs are required (single-ended encoders are not supported) and provide incremental position feedback via the A/B signals and the optional index signal (X) gives a once per revolution position mark. The MAX3097 receiver has differential inputs with fault protections for the following conditions:

Condition	Example
Line-line shorts	A shorted to /A
Open-circuits:	A disconnected, /A connected. Terminator resistor pulls A & /A together for a short-circuit fault
Low-voltage	Va - Vb ≤ 200 mV, or ≥ -200 mV Encoder power loss, cabling, etc.

SIGNAL LOSS DETECTION LOGIC

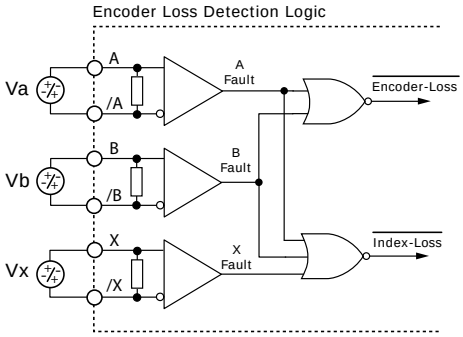

QUAD ENCODER WITH INDEX

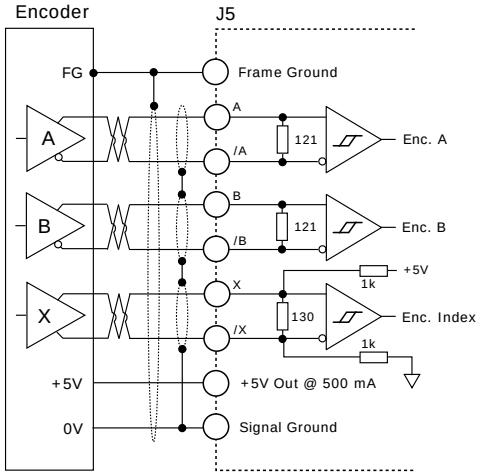

A/B/X SIGNALS

Signal	J6 Pins
Enc A	13
Enc /A	12
Enc B	11
Enc /B	10
Enc X	9
Enc /X	8
+5V	6, 17
Sgnd	5, 16, 25, 26
F.G.	1

Sgnd = Signal Ground
F.G. = Frame Gnd

CME2 FEEDBACK OPTIONS

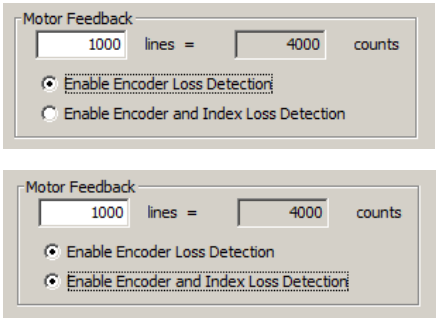

ANALOG SIN/COS INCREMENTAL ENCODER

The sin/cos inputs are analog differential with 121 Ω terminating resistors and accept 1 Vp-p signals in the format used by incremental encoders with analog outputs, or with *ServoTube* motors. The index input is digital, differential.

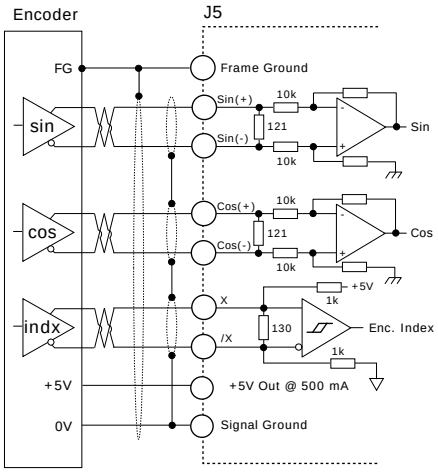

SIN/COS SIGNALS

Signal	J6 Pins
Sin(+)	19
Sin(-)	18
Cos(+)	21
Cos(-)	20
X	9
/X	8
+5V	6, 17
Sgnd	5, 16, 25, 26
F.G.	1

Sgnd = Signal Ground
F.G. = Frame Gnd

RESOLVER (-R OPTION)

Connections to the resolver should be made with double-shielded cable that uses three twisted-pairs plus an outer shield. Once connected, resolver set up, motor phasing, and other commissioning adjustments are made with CME 2 software. There are no hardware adjustments.

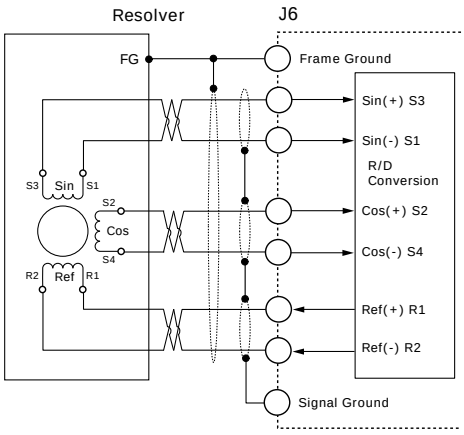

RESOLVER SIGNALS

Signal	J6 Pins
Sin(+) S3	19
Sin(-) S1	18
Cos(+) S2	21
Cos(-) S4	20
Ref(+) R1	9
Ref(-) R2	8
F.G.	12

Sgnd = Signal Ground
F.G. = Frame Gnd

FEEDBACK CONNECTIONS

SSI ABSOLUTE ENCODER

The SSI (Synchronous Serial Interface) is an interface used to connect an absolute position encoder to a motion controller or control system. The XEL drive provides a train of clock signals in differential format to the encoder which initiates the transmission of the position data on the subsequent clock pulses. The polling of the encoder data occurs at the current loop frequency (16 kHz). The number of encoder data bits and counts per motor revolution are programmable.
The hardware bus consists of two signals: SCLK and SDATA. Data is sent in 8 bit bytes, LSB first. The SCLK signal is only active during transfers. Data is clocked out on the falling edge and clock in on the rising edge of the Master.

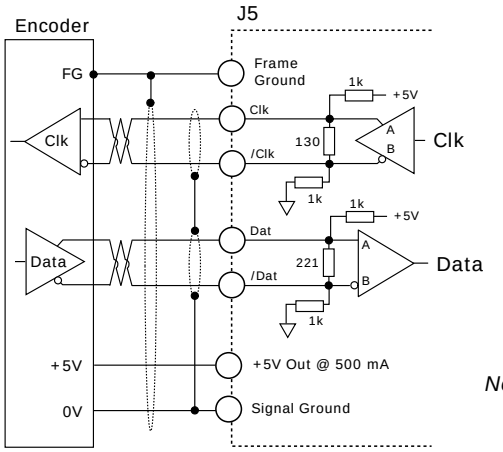

SSI,BiSS SIGNALS

SSI	BiSS	J6 Pins
Clk	MA+	9
/Clk	MA-	8
Data	SL+	15
/Data	SL-	14
+5V		6, 17
Signal Ground		5, 16, 25, 26
Frame Gnd		1

Note: Single (outer) shields should be connected at both ends (motor and drive frame grounds). Inner shields should only be connected to Signal Ground on the drive.

BiSS ABSOLUTE ENCODER

BiSS is an - Open Source - digital interface for sensors and actuators. BiSS refers to principles of well known industrial standards for Serial Synchronous Interfaces like SSI, AS-Interface® and Interbus® with additional options.

- Serial Synchronous Data Communication
- Cyclic at high speed
- 2 unidirectional lines Clock and Data
  - Line delay compensation for high speed data transfer
  - Request for data generation at slaves
  - Safety capable: CRC, Errors, Warnings
  - Bus capability incl. actuators
- Bidirectional
  - BiSS B-protocol: Mode choice at each cycle start
  - BiSS C-protocol: Continuous mode

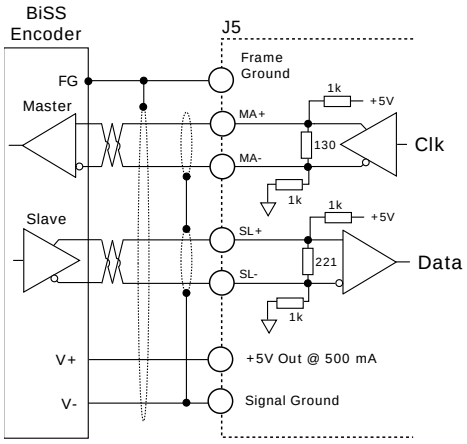

ENDAT ABSOLUTE ENCODER

The EnDat interface is a Heidenhain interface that is similar to SSI in the use of clock and data signals, but which also supports analog sin/cos channels from the same encoder. The number of position data bits is programmable as is the use of sin/cos channels. Use of sin/cos incremental signals is optional in the EnDat specification.

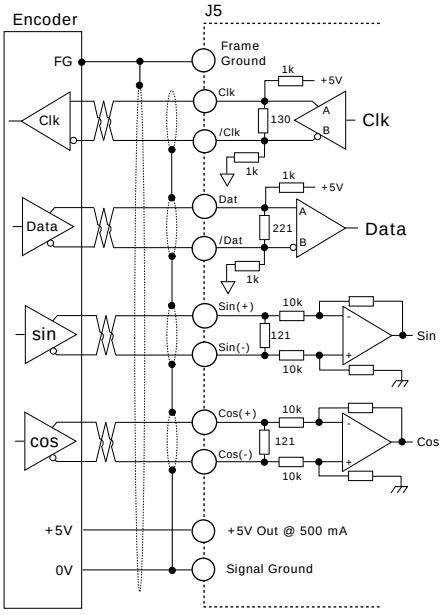

ENDAT SIGNALS

Signal	J6 Pins
Clk	9
/Clk	8
Data	15
/Data	14
Sin(+)	19
Sin(-)	18
Cos(+)	21
Cos(-)	20
+5V	6, 17
Sgnd	5, 16, 25, 26
F.G.	1

Sgnd = Signal Ground
F.G. = Frame Gnd

ABSOLUTE-A ENCODER

The Absolute A interface is a serial, half-duplex type that is electrically the same as RS-485. Note the battery which must be connected. Without it, the encoder will produce a fault condition.

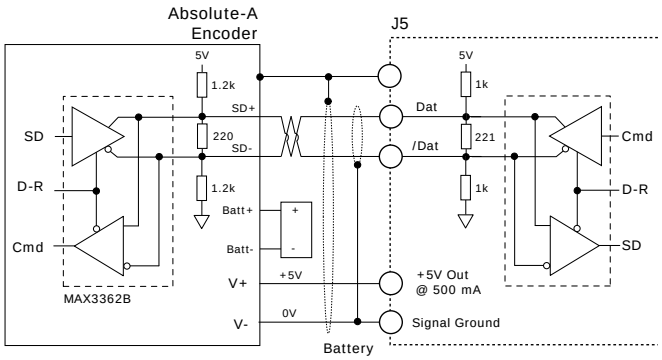

ABSOLUTE-A SIGNALS

Signal	J6 Pins
Data	15
/Data	14
+5V	6, 17
Sgnd	5, 16, 25, 26
F.G.	1

Sgnd = Signal Ground
F.G. = Frame Gnd

MOTOR CONNECTIONS

MOTOR PHASE CONNECTIONS

The drive output is a three-phase PWM inverter that converts the DC buss voltage (+HV) into three sinusoidal voltage waveforms that drive the motor phase-coils. Cable should be sized for the continuous current rating of the motor. Motor cabling should use twisted, shielded conductors for CE compliance, and to minimize PWM noise coupling into other circuits. The motor cable shield should connect to motor frame and the drive frame ground terminal (J7-1) for best results.

MOTOR SIGNALS

Signal	J7 Pin
Mot U	4
Mot V	3
Mot W*	2
Frame Gnd	1

** MOT W not used for DC brush motors*

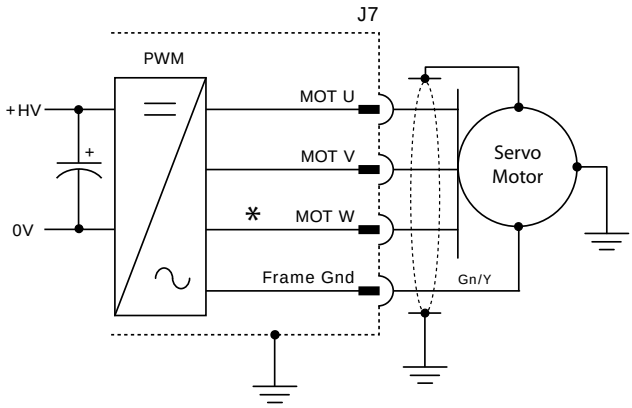

DIGITAL HALL SIGNALS

Hall signals are single-ended signals that provide absolute feedback within one electrical cycle of the motor. There are three of them (U, V, & W) and they may be sourced by magnetic sensors in the motor, or by encoders that have Hall tracks as part of the encoder disc. They typically operate at much lower frequencies than the motor encoder signals, and are used for commutation-initialization after startup, and for checking the motor phasing after the amplifier has switched to sinusoidal commutation.

HALL SIGNALS

Signal	J6 Pins
Hall U	2
Hall V	3
Hall W	4
+5V	6, 17
Sgnd	5, 16, 25, 26
Frame Gnd	1

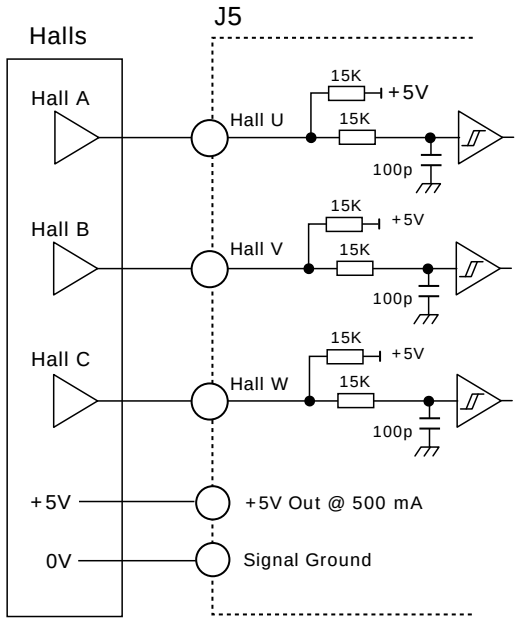

MOTOR OVER TEMP INPUT

The 4.99k pull-up resistor works with PTC (positive temperature coefficient) thermistors that conform to BS 4999:Part 111:1987 (table below), or switches that open/close indicating a motor over-temperature condition. The active level is programmable. These inputs are programmable for other functions if not used as Motemp inputs. And, other inputs are programmable for the Motemp function.

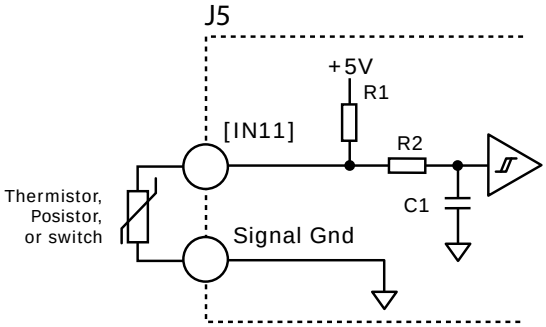

MOTEMP SIGNALS

Signal	J6 Pins
Motemp	7
J6 Signal Ground	5,16,25,26
Frame Gnd	1

BS 4999 SENSOR

Property	Ohms
Resistance in the temperature range 20°C to +70°C	60~750
Resistance at 85°C	≤1650
Resistance at 95°C	≥3990
Resistance at 105°C	≥12000

MOTOR CONNECTIONS: DIGITAL QUAD A/B ENCODERS

The connections shown may not be used in all installations

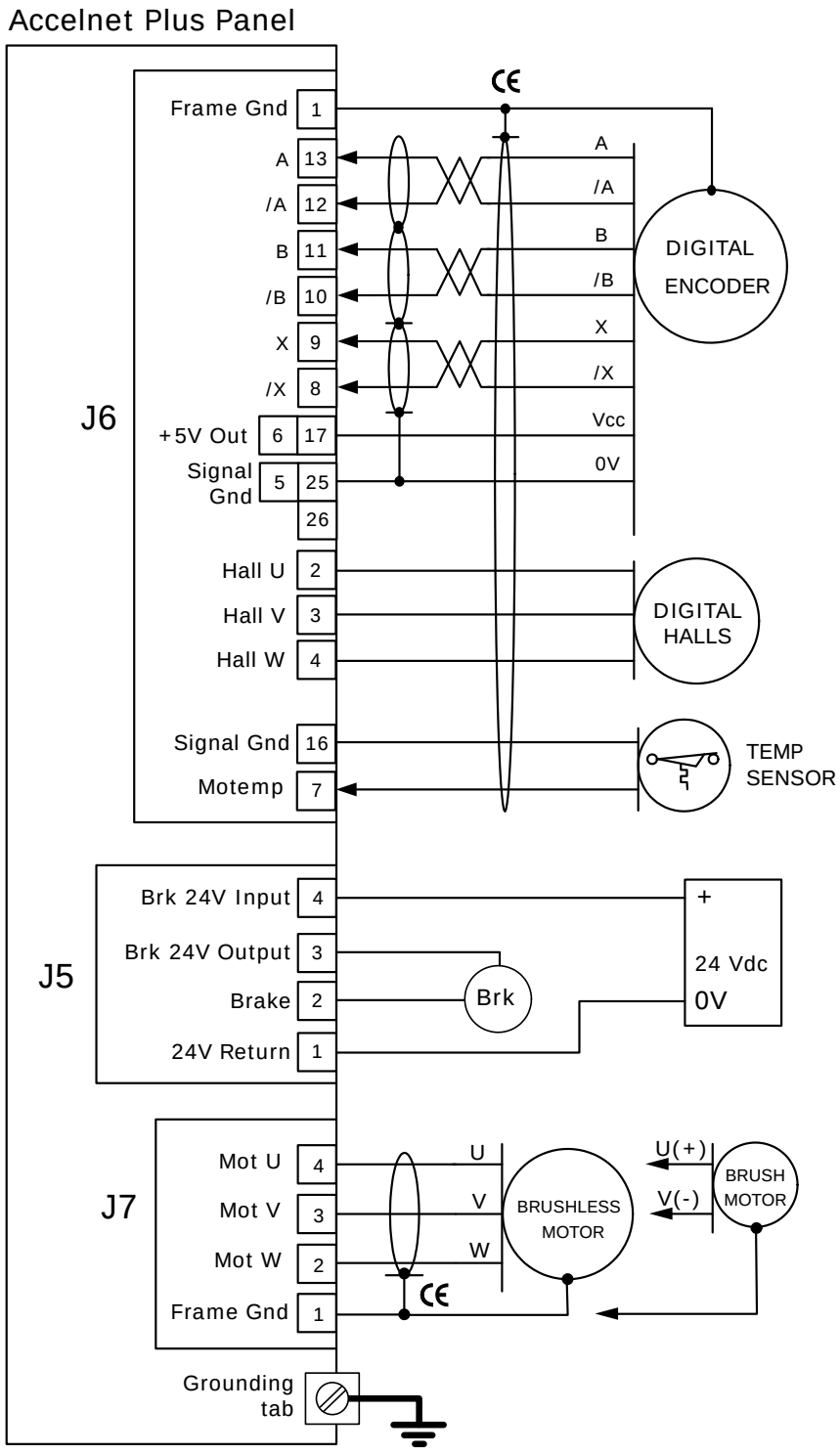

NOTES:

1) +5V Out on J1 & J6 connect to the same power supply. The sum of output currents is limited to 500 mA
2) CE symbols indicate connections required for CE compliance.

MOTOR CONNECTIONS: ANALOG SIN/COS INCREMENTAL ENCODERS

The connections shown may not be used in all installations

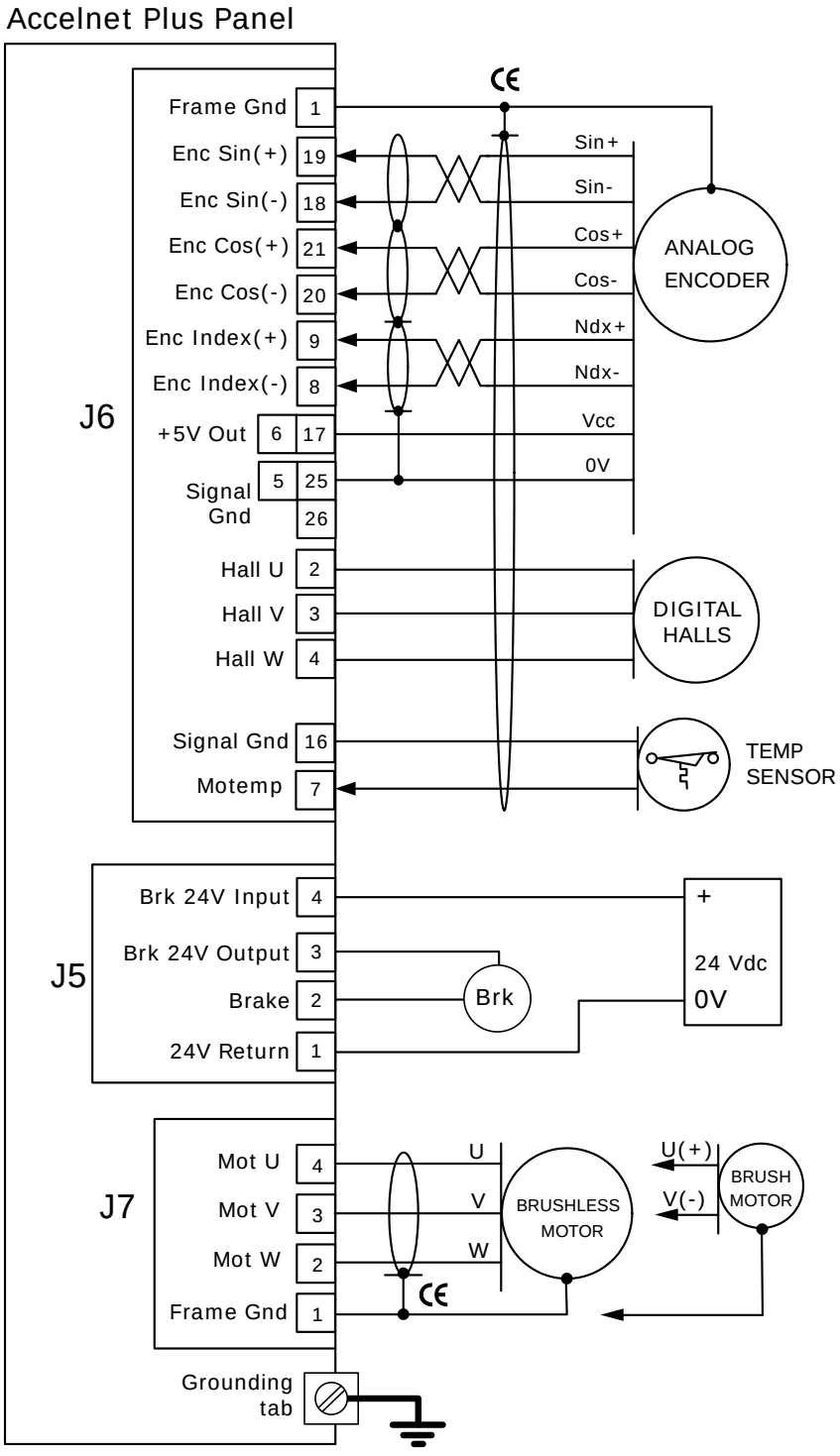

NOTES:

1) +5V Out on J1 & J6 connect to the same power supply. The sum of output currents is limited to 500 mA
2) CE symbols indicate connections required for CE compliance.

MOTOR CONNECTIONS: RESOLVERS (-R OPTION)

The connections shown may not be used in all installations.
Hall signals are not generally used with resolver feedback but are shown here because they function if needed for resolver operation.

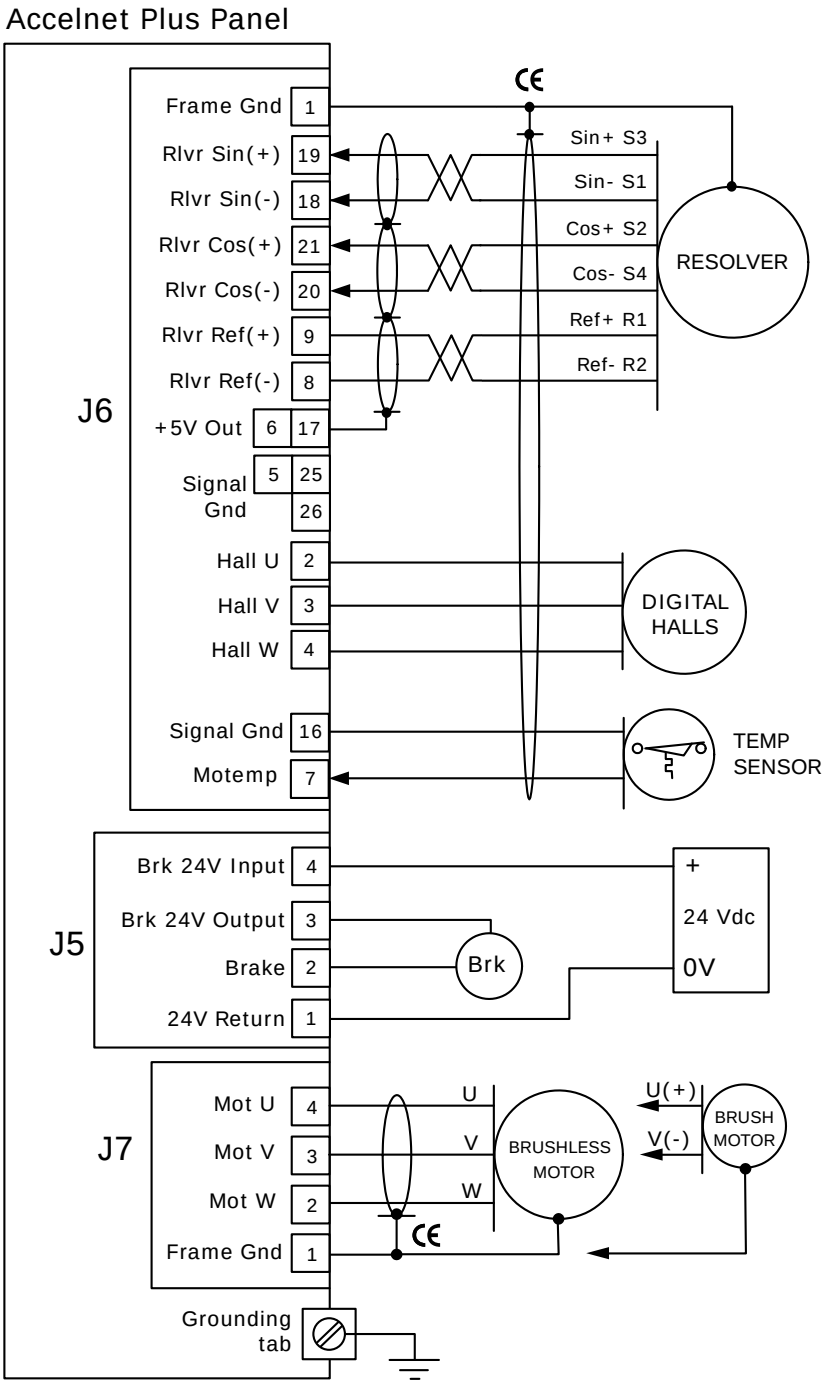

NOTES:

1) +5V Out on J1 & J6 connect to the same power supply. The sum of output currents is limited to 500 mA
2) CE symbols indicate connections required for CE compliance.

DEVICE STRUCTURE & ISOLATION

This graphic shows the electrical structure of the drive, detailing the elements that share a common circuit common (Signal Ground, HV Com) and circuits that are isolated and have no connection to internal circuits. Note that there is no connection between the heatplate (Chassis, Frame Ground) and any drive circuits.

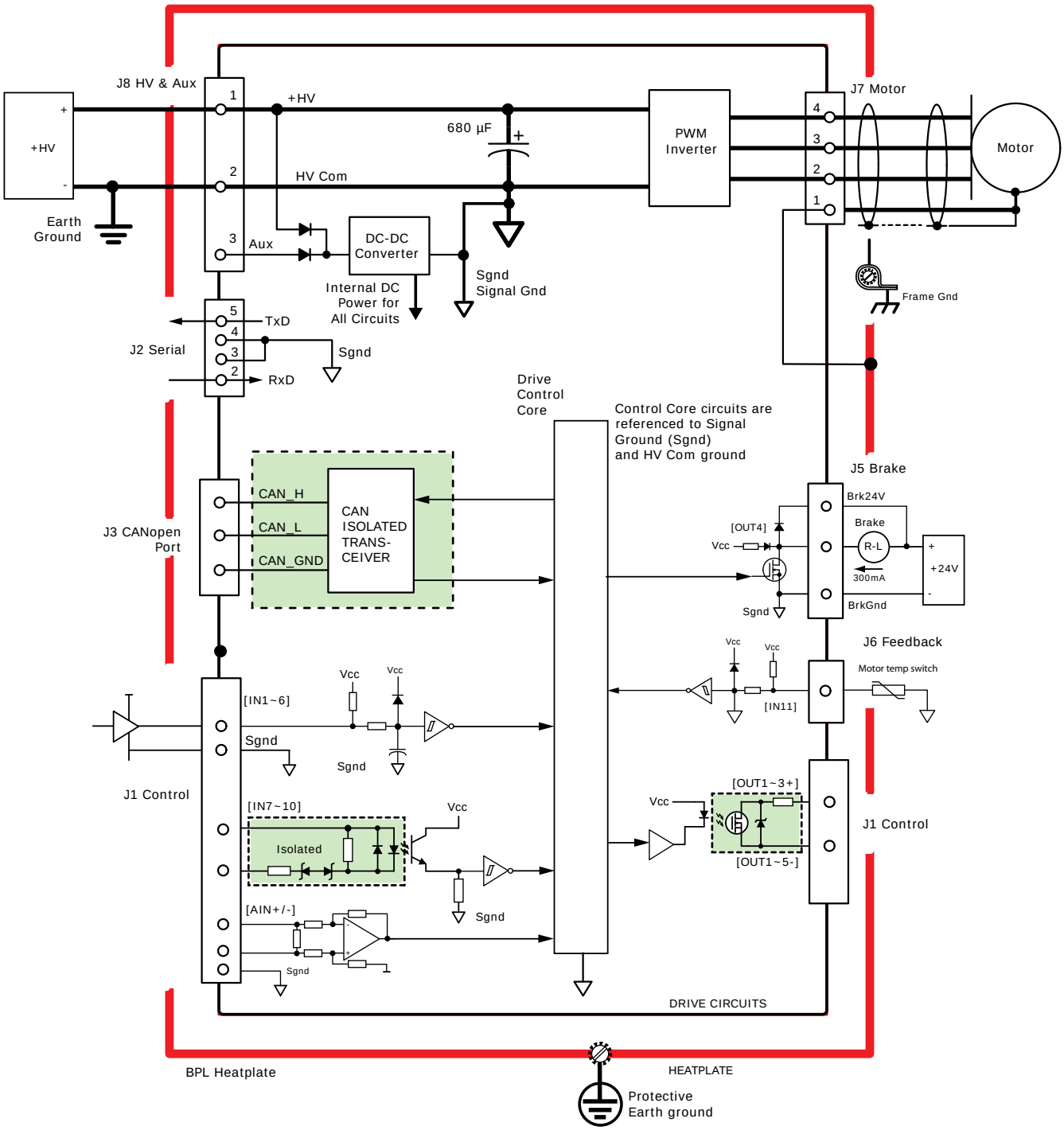

POWER & GROUNDING CONNECTIONS

DC POWER CONNECTIONS

- DC power must be provided by transformers that are galvanically isolated and provide reinforced insulation from the mains. *Auto-transformers cannot be used*.
- The (-) terminal of the power supply is not grounded at the power supply. It is grounded near each drive.
- Cabling to multiple drives for the +HV and 0V is best done in a "star" configuration, and not a "daisy-chain".
- The 0V, or return terminal of the DC power should be connected to frame ground near the drive power connector. From that point, a short wire can connect to the drive HV Ground.
- Cabling to the drive +HV and 0V terminals must be sized to carry the expected continuous current of the drive in the user's installation.
- DC power cabling should be shielded, twisted-pair for best EMI reduction. The shield should connect to the power supply frame ground on one end, and to the drive frame ground on the other. Adding a pigtail and ring-lug, as short as possible will provide a good connection of the shield at the drive.
- Motor cabling typically includes a green/yellow conductor for protective bonding of the motor frame. Connect as shown in the Motor Connections diagram on the following page.
- Motor cable conductors should be twisted and shielded for best EMI suppression.
- If a green/yellow grounding wire connects the motor to the drive's PE terminal, the shield pigtail and ring-lug may connect to one of the screws that mount the drive to the panel. A P-clip to ground the shield as near as possible to the drive will increase the EMI suppression of the shield. On the motor-end, the shield frequently connects to the connector shell. If the motor cable is a flying-lead from the motor, the shield may be connected to the motor frame internally.
- Braided cable shields are more effective for EMI reduction than foil shields. Double-shielded cables typically have a braided outer shield and foil shields for the internal twisted pairs. This combination is effective for both EMI reduction and signal quality of the feedback signals from analog encoders or resolvers.
- Motor cable shielding is not intended to be a protective bonding conductor unless otherwise specified by the motor manufacturer.
- For feedback cables, double-shielded cable with a single outer shield and individual shielded twisted pair internal shields gives the best results with resolvers, or analog sin/cos encoders.
- In double-shielded cables, the internal shielding should connect to the drive's Signal Ground on one end, and should be unconnected on the motor end.
- Single-shield feedback cables connect to the drive frame on one end, and to the motor frame on the other. Depending on the construction of the motor, leaving the feedback cable shield disconnected on the motor but connected on the drive end may give better results.
- The drive should be secured to the equipment frame or panels using the mounting slots. This ensures a good electrical connection for optimal EMI performance. The drive chassis is electrically conductive.

DC POWER WIRING

P-clips secure cables to a panel and provide full contact to the cable shields after the insulation has been stripped. This should be done as close to the drive as possible for best EMI attenuation.

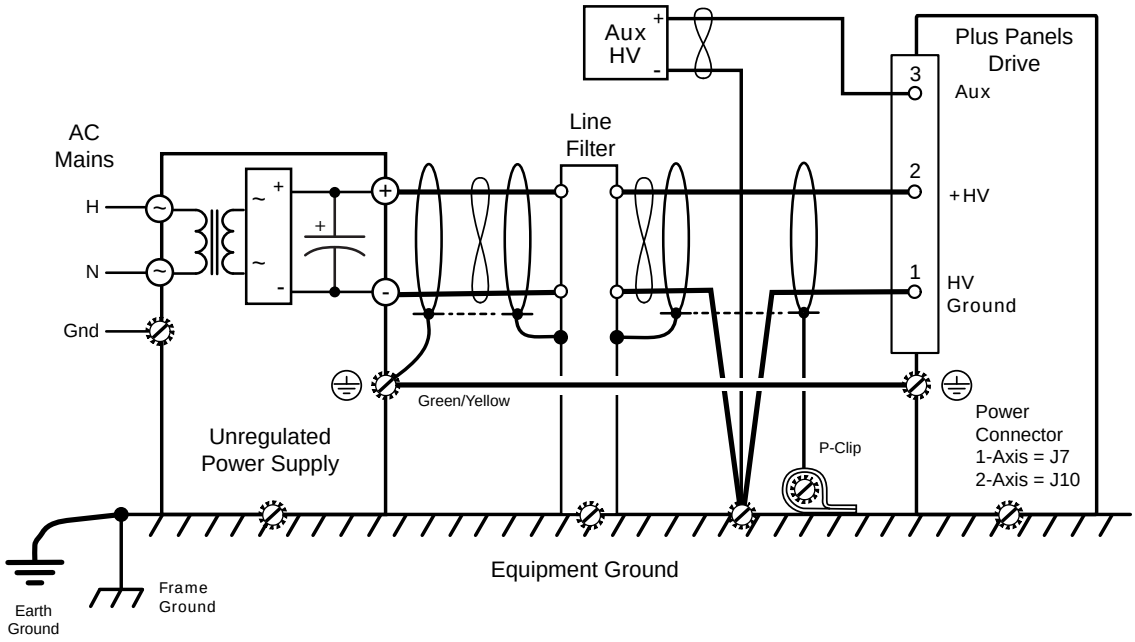

+HV POWER SUPPLY REQUIREMENTS

Regulated Power Supplies

- Must be over-voltage protected to 100 Vdc max when the STO (Safe Torque Off) feature of the drive is used.
- Require a diode and external capacitor to absorb regenerative energy.
- The VA rating should be greater than the actual continuous output power of the drives connected to the power supply, and adequate for the transient output power due to acceleration of motor loads.
- Must handle the internal capacitance of the drives on startup.

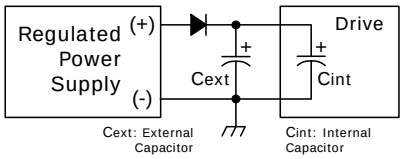

Unregulated Power Supplies

- No-load, high-line output voltage must not exceed 90 Vdc.
- Power supply internal capacitance adds to the drive's internal capacitance for absorption of regenerative energy.
- The VA (Volts & Amps) rating at the power supply's AC input is typically 30~40% greater than the total output power of the drives.

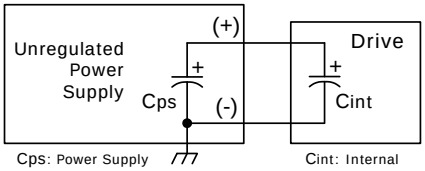

AUXILIARY HV POWER

- Aux HV is power that can keep the drive communications and feedback circuits active when the PWM output stage has been disabled by removing the main +HV supply.
- Useful during EMO (Emergency Off) conditions where the +HV supply must be removed from the drive and powered-down to ensure operator safety.
- Voltage range is the same as +HV.
- Powers the DC/DC converter that supplies operating voltages to the drive DSP and control circuits.
- Aux HV draws no current when the +HV voltage is greater than the Aux HV voltage.

MOTOR CONNECTIONS

- Motor cable shield connects to motor frame, is grounded with a P-clip near the drive and terminates in a ring-lug that is screwed to the drive chassis by a mounting screw to the panel
- If provided, a green/yellow grounding wire from the motor connects to the F.G. terminal of the motor connector.

FEEDBACK CONNECTIONS

- Cable shield connects to motor frame and to the F.G. terminal of the feedback connector.
- When double-shielding is used, the inner shields connect to the Signal Ground at the drive, and is not connected at the motor end.
- If not provided by the motor manufacturer, feedback cables rated for RS-422 communications are recommended for digital encoders.

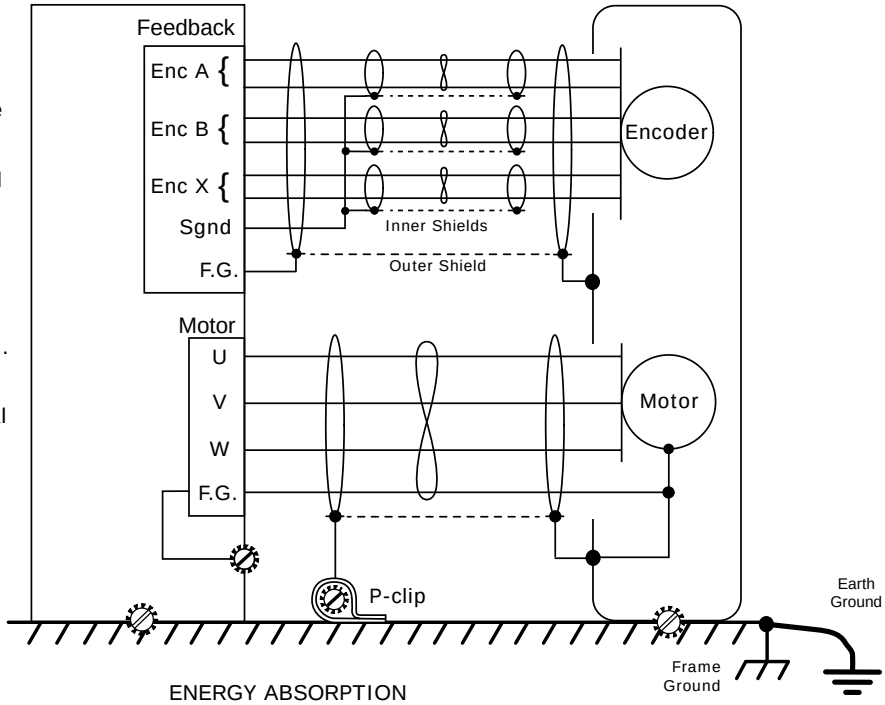

REGENERATION

This chart shows the energy absorption in W·s for the drive operating at some typical DC voltages. It is based on the internal 680 uF capacitor and would be increased by the capacitance of the external DC power supply. When the load mechanical energy is greater than these values an external regenerative energy dissipater is required, or the DC power supply capacitance can be increased to absorb the regen energy.

ENERGY ABSORPTION

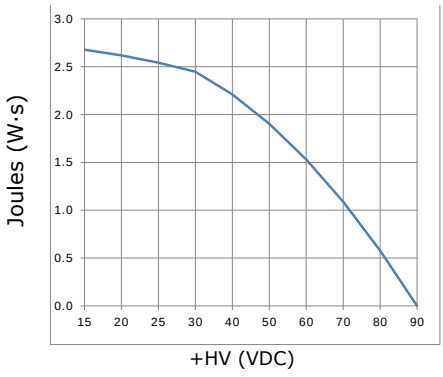

CONNECTORS & SIGNALS: FRONT PANEL

J4 SAFETY (SAFE TORQUE OFF)

CONNECTIONS

PIN	SIGNAL	PIN	SIGNAL
1	Frame Gnd	6	STO-1(+)
2	STO-1(+)	7	STO-1(-)
3	STO-1(-)	8	STO-24V
4	STO-2(+)	9	STO-GND
5	STO-2(-)		

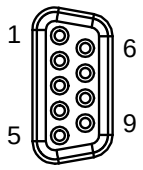

J4 BPL CONNECTOR:
Dsub DB-09F, 9 position female receptacle

J4 CABLE CONNECTOR:
Poke and crimp Dsub DB-09M, 9 position

Details on J1, J4, & J6 cable connectors can be found in the BPL-CK listing under the Accessories section of the last page

J1: CONTROL SIGNALS

PIN	SIGNAL	PIN	SIGNAL	PIN	SIGNAL
1	Frame Gnd	16	Signal Gnd	31	Signal Gnd
2	[AIN1-]	17	+5Vout	32	+5Vout
3	[AIN1+]	18	MultiEnc /S	33	MultiEnc S
4	N/C	19	MultiEnc /X	34	MultiEnc X
5	N/C	20	MultiEnc /B	35	MultiEnc B
6	Signal Gnd	21	MultiEnc /A	36	MultiEnc A
7	[IN1]	22	Signal Gnd	37	Signal Gnd
8	[IN2]	23	N/C	38	N/C
9	[IN3] Diff1(+)	24	N/C	39	N/C
10	[IN4] Diff1(-)	25	[OUT3-]	40	[OUT3+]
11	[IN5] Diff2(+)	26	[OUT2-]	41	[OUT2+]
12	[IN6] Diff2(-)	27	[OUT1-]	42	[OUT1+]
13	[IN7]	28	[ICOM]	43	N/C
14	[IN8]	29	N/C	44	Signal Gnd
15	[IN9]	30	[IN10]		

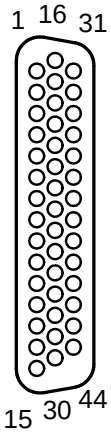

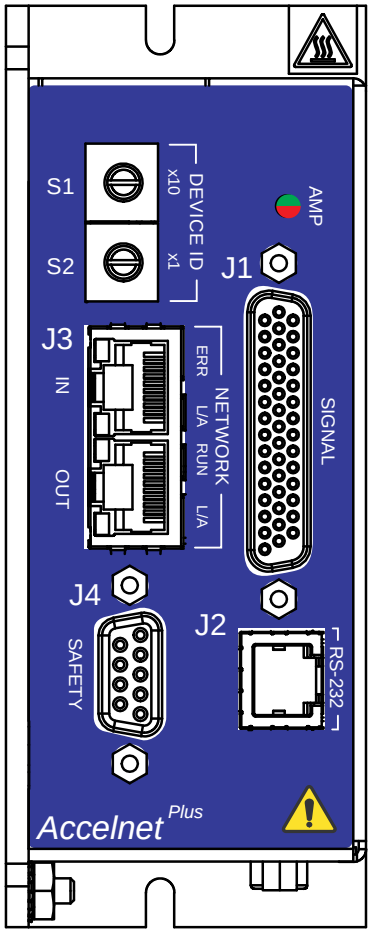

J1: BPL CONNECTOR
High-Density Dsub DB-44F, female receptacle, 44 Position

J1: CABLE CONNECTOR
High-Density Dsub DB-44M, male plug, 44 Position

CONNECTORS & SIGNALS: DIGITAL AND ANALOG ENCODERS

J5: BRAKE

Pin	Signal
4	Brk 24V Input
3	Brk 24V Output
2	Brake A [OUT6]
1	24V Return

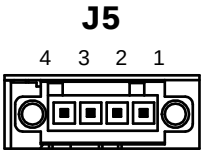

J5: BPL CONNECTOR
Euro-style 3.5 mm male receptacle, 4-position
Wago: MCS-MINI, 734-165/108-000

J5: CABLE CONNECTOR
Wago MCS-MINI 734-104/107-000
or 734-105/107-000

WAGO CONNECTOR TOOL
Contact opener: 734-231 operating tool

J6: FEEDBACK

PIN	SIGNAL
26	Signal Gnd
25	Signal Gnd
24	N/C
23	N/C
22	N/C
21	Cos(+)
20	Cos(-)
19	Sin(+)

PIN	SIGNAL
18	Sin(-)
17	+5VOut
16	Signal Gnd
15	Enc S
14	Enc /S
13	Enc A
12	Enc /A
11	Enc B
10	Enc /B

PIN	SIGNAL
9	Enc X
8	Enc /X
7	[IN11] Motemp
6	+5VOut
5	Signal Gnd
4	Hall W
3	Hall V
2	Hall U
1	Frame Gnd

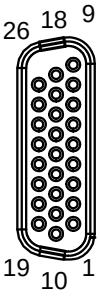

J6

J6: MOTOR FEEDBACK

J6: BPL CONNECTOR
High-Density Dsub DB-26F,
female receptacle, 26 Position

J6: CABLE CONNECTOR
High-Density Dsub DB-26M,
male plug, 26 Position

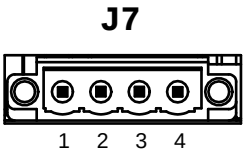

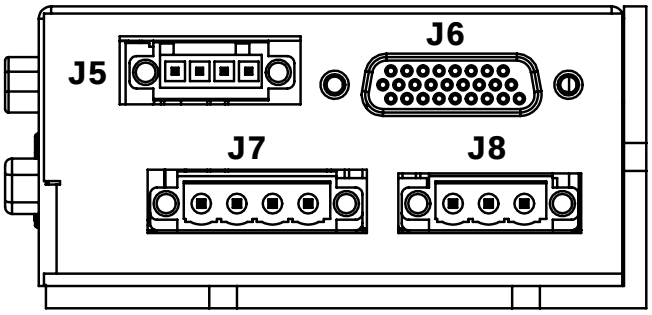

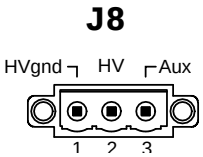

J7: MOTOR OUTPUT

Signal	Pin
Frame Ground	1
Motor Phase W	2
Motor Phase V	3
Motor Phase U	4

J7: DRIVE CONNECTORS
Euro-style 5.08 mm male receptacle, 4-position
Wago: MCS-MIDI, 231-564/108-000

J7 CABLE CONNECTORS
Wago MCS-MIDI Classic 231-304/107-000

WAGO CONNECTOR TOOL
Contact opener: 231-159 operating tool

J8:+HV & AUX POWER

Signal	**Pin**
HV Ground	1
HV	2
Aux HV	3

J8: DRIVE CONNECTOR
Euro-style 5.08 mm male receptacle, 3-position
Wago: MCS-MIDI, 231-563/108-000

J8: CABLE CONNECTOR
Wago MCS-MIDI, 231-303/107-000

WAGO CONNECTOR TOOL
Contact opener: 231-159 operating tool

CONNECTORS & SIGNALS: RESOLVER OPTION (-R)

J5: BRAKE

Pin	Signal
4	Brk 24V Input
3	Brk 24V Output
2	Brake A [OUT4]
1	24V Return

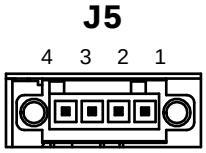

J5: BPL CONNECTOR
Euro-style 3.5 mm male receptacle, 4-position
Wago: MCS-MINI, 734-164/108-000

J5: CABLE CONNECTOR
Wago MCS-MINI 734-104/107-000
or 734-105/107-000

WAGO CONNECTOR TOOL
Contact opener: 734-231 operating tool

J6: FEEDBACK

PIN	SIGNAL
26	Signal Gnd
25	Signal Gnd
24	N/C
23	Ref(+) R1
22	Ref(-) R2
21	Cos(+) S2
20	Cos(-) S4
19	Sin(+) S3

PIN	SIGNAL
18	Sin(-) S1
17	+5VOut
16	Signal Gnd
15	Enc S
14	Enc /S
13	Enc A
12	Enc /A
11	Enc B
10	Enc /B

PIN	SIGNAL
9	Enc X
8	Enc /X
7	[IN11] Motemp
6	+5VOut
5	Signal Gnd
4	Hall W
3	Hall V
2	Hall U
1	Frame Gnd

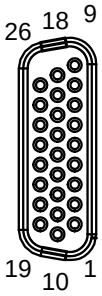

J6

J6: MOTOR FEEDBACK

J6: BPL CONNECTOR
High-Density Dsub DB-26F,
female receptacle, 26 Position

J6: CABLE CONNECTOR
High-Density Dsub DB-26M,
male plug, 26 Position

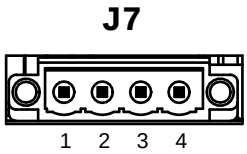

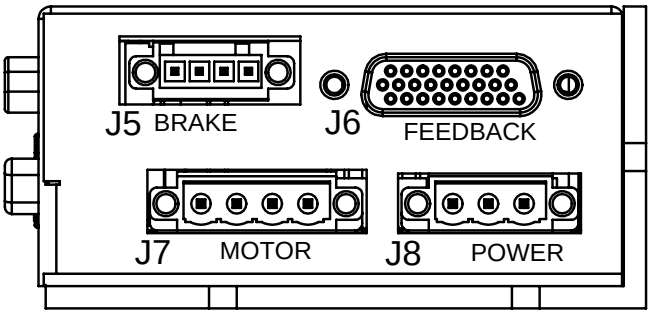

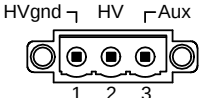

J7: MOTOR OUTPUT

Signal	Pin
Frame Ground	1
Motor Phase W	2
Motor Phase V	3
Motor Phase U	4

J7: DRIVE CONNECTORS
Euro-style 5.08 mm male receptacle, 4-position
Wago: MCS-MIDI, 231-564/108-000

J7 CABLE CONNECTORS
Wago MCS-MIDI Classic 231-304/107-000

WAGO CONNECTOR TOOL
Contact opener: 231-159 operating tool

J8:+HV & AUX POWER

Signal	**Pin**
HV Ground	1
HV	2
Aux HV	3

J8: DRIVE CONNECTOR
Euro-style 5.08 mm male receptacle, 3-position
Wago: MCS-MIDI, 231-563/108-000

J8: CABLE CONNECTOR
Wago MCS-MIDI, 231-303/107-000

WAGO CONNECTOR TOOL
Contact opener: 231-159 operating tool

WIRING

24V & BRAKE: J5

Wago MCS-MINI: 734-104/107-000, female connector; with screw flange; 4-pole; pin spacing 3.5 mm / 0.138 in

Conductor capacity
Bare stranded: AWG 28~16 [0.08~1.5 mm2]
Insulated ferrule: AWG 24~16 [0.25~1.5 mm2]
Stripping length: 0.24~0.28 in[6~7 mm]
Operating tool: Wago MCS-MINI: 734-231

FERRULE PART NUMBERS: SINGLE WIRE INSULATED

AWG	mm²	Color	Mfgr	PNUM	A	B	C	D	E	SL
18	1.0	Red	Wago	216-223	12.0 (.47)	6.0 (.24)	1.4 (.06)	3.0 (.12)	3.5 (.14)	8 (.31)
20	0.75	Gray	Wago	216-222	12.0 (.47)	6.0 (.24)	1.2 (.05)	2.8 (.11)	3.3 (.13)	8 (.31)
22	0.5	White	Wago	216-221	12.0 (.47)	6.0 (.24)	1.0 (.04)	2.6 (.10)	3.1 (.12)	7.5 (.30)

FERRULE PART NUMBERS: DOUBLE WIRE INSULATED

AWG	mm²	Color	Mfgr	PNUM	A	B	C	D	E	SL
2 x 18	2 x 1.0	Red	Altech	2776.0	15.4 (.61)	8.2 [.32]	2.4 (.09)	3.2 (.13)	5.8 (.23)	11.0 (.43)
2 x 18	2 x 1.0	Gray	Altech	2775.0	14.6 (.57)	8.2 (.32)	2.0 (.08)	3.0 (.12)	5.5 (.22)	11.0 (.43)
2 x 20	2 x 0.75	White	Altech	2794.0	14.6 (.57)	8.2 (.32)	1.7 (.07)	3.0 (.12)	5.0 (.20)	11.0 (.43)
2 x 20	2 x 0.75	Gray	TE	966144-2	15.0 (.59)	8.0 (.31)	1.70 (.07)	2.8 (.11)	5.0 (.20)	10 (.39)
2 x 22	2 x 0.50	White	TE	966144-1	15.0 (.59)	8.0 (.31)	1.40 (.06)	2.5 (.10)	4.7 (.19)	10 (.39)

NOTES
PNUM = Part Number
SL = Stripping length
Dimensions: mm (in)

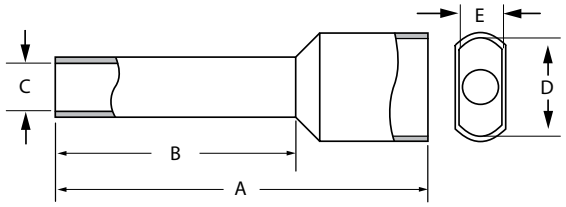

HV/AUX POWER AND MOTOR OUTPUTS: J7 & J8

Wago MCS-MIDI Classic: 231-304/107-000 (J7), 231-303/107-000 (J8); with screw flange; 3-pole; pin spacing 5.08 mm / 0.2 in

Conductor capacity
Bare stranded: AWG 28~14 [0.08~2.5 mm2]
Insulated ferrule: AWG 24~16]0.25~1.5 mm2]
Stripping length: 8~9 mm
Operating Tool: Wago MCS-MIDI Classic: 231-159

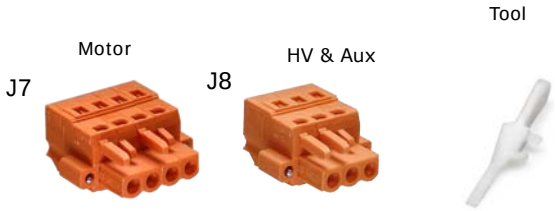

FERRULE PART NUMBERS: SINGLE WIRE INSULATED

AWG	mm²	Color	Mfgr	PNUM	A	B	C	D	E	SL
14	2.5	Blue	Wago	216-206	15.0 (0.59)	8.0 (0.31)	2.05 (.08)	4.2 (0.17)	4.8 (0.19)	10 (0.39)
16	1.5	Black	Wago	216-204	14.0 (0.59	8.0 (0.31)	1.7 (.07)	3.5 (0.14)	4.0 (0.16)	10 (0.39)
18	1.0	Red	Wago	216-223	12.0 (.47)	6.0 (.24)	1.4 (.055)	3.0 (.12)	3.5 (.14)	8 (.31)
20	0.75	Gray	Wago	216-222	12.0 (.47)	6.0 (.24)	1.2 (.047)	2.8 (.11)	3.3 (.13)	8 (.31)
22	0.5	White	Wago	216-221	12.0 (.47)	6.0 (.24)	1.0 (.039)	2.6 (.10)	3.1 (.12)	7.5 (.30)

NOTES
PNUM = Part Number
SL = Stripping length
Dimensions: mm (in)

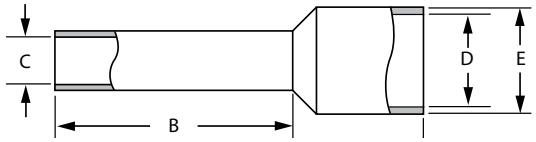

HEATSINK KIT INSTALLATION

- STANDARD HEATSINK FOR ACCELNET PLUS PANEL BPL
- COMPLETE KIT FOR USER INSTALLATION OF THE HEATSINK

DESCRIPTION

The BPL-HK is a kit containing a heatsink and mounting hardware for field installation of a standard heatsink onto BPL model servo drive.
To order an BPL drive with heatsink fitted at the factory, add "-H" to the model part number.

HEATSINK KIT PART LIST

Qty	Description	
1	Heatsink, standard, BPL-HS	
1	Thermal pad, 4x4 in.	
1	Kit, Heatsink Hardware, BPL	
	4	Washer, flat, #8
	4	Screw, PAN, SEMS, #8-32 x 1/2 in

INSTALLATION

1) Place the heatsink fins-down on a work surface. Orient the heatsink so that the edge with part number is away from you. The hole for the BPL grounding lug should be to your left.
2) Remove the clear protective film from the thermal material and discard it. Place the thermal material onto the heatsink in the placement area which is marked with four white "L". Apply light pressure to ensure that the thermal material is flat.
3) Peel the white protective layer away from the thermal material. Do this slowly from one corner so as not to lift the thermal material from the heatsink.
4) Align the BPL as shown and lower onto the heatsink. If needed to adjust the position, lift it away from the thermal material and lower onto the heatsink again.
5) Install the four mounting screws with flat washers and tighten evenly. Torque to 17.8 lb-in (2.0 Nm) maximum.

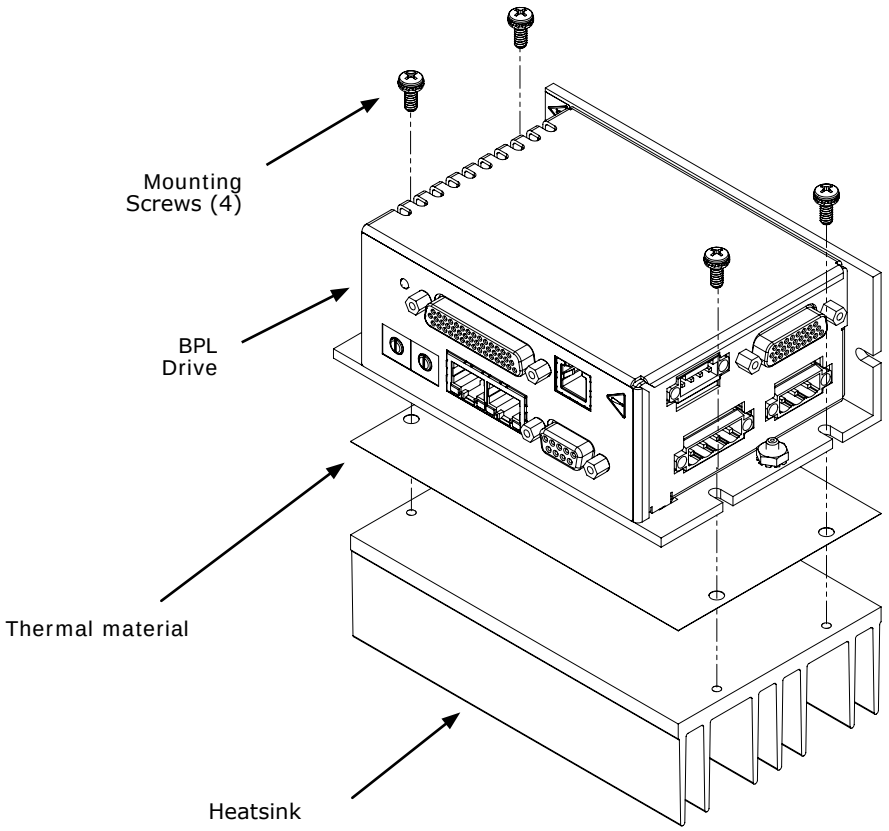

THERMALS: POWER DISSIPATION

POWER DISSIPATION

The top chart on this page shows the internal power dissipation of the BPL under differing power supply and output current conditions. The +HV values are for the average DC voltage of the drive power supply. The lower chart shows the temperature rise vs. power dissipation under differing mounting and cooling conditions.

POWER DISSIPATION

Use this chart to find the Watts dissipation.
The vertical dashed lines show the continuous currents for the three BPL models.

Example BPL-090-30:

Power supply HV = 65 Vdc
Current = 12.5A
Power dissipation= 10.8 W

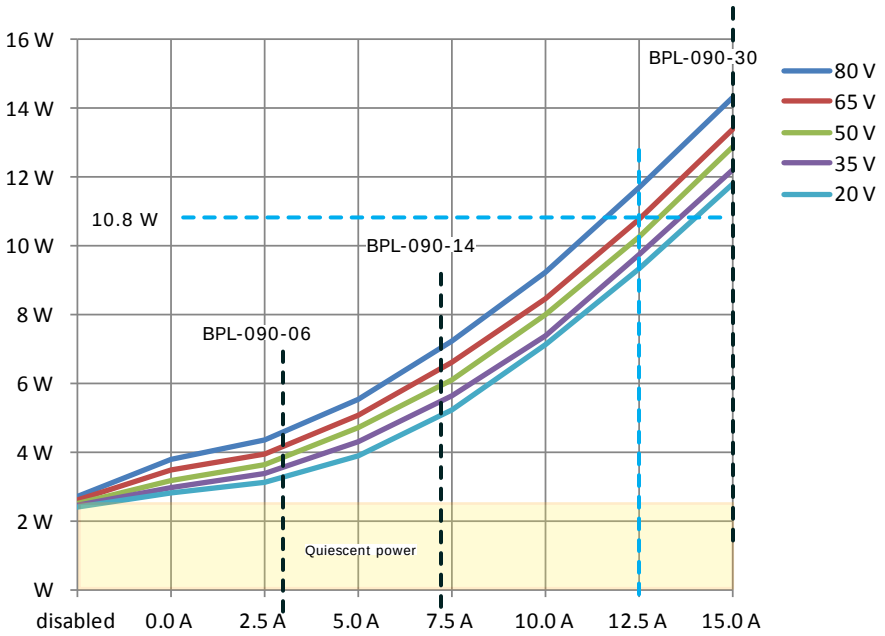

THERMALS: MAXIMUM OPERATING TEMPERATURE VS. DISSIPATION

MAXIMUM OPERATING TEMPERATURE VS. DISSIPATION

Use this chart to find the maximum operating temperature of the drive under differing mounting and cooling conditions.

Example:

Using the 10.8 W value from the calculations above, draw a vertical line. This shows that 33 C is the maximum operating temperature for NHSNF. Both HSF and NHSF mountings allow operation to 45 C maximum ambient.

HSF = Heat Sink (with) Fan
NHSF = No Heat Sink (with) Fan
HSNF = Heat Sink No Fan
NHSNF = No Heat Sink No Fan

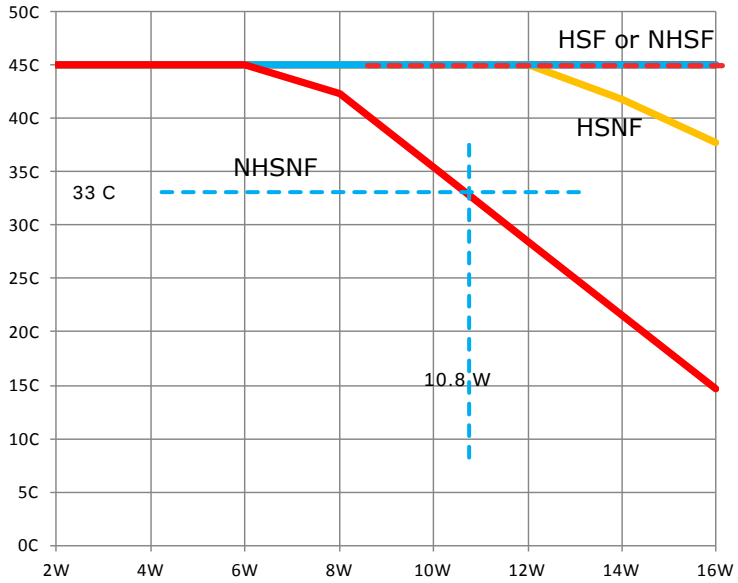

THERMALS: MOUNTING & THERMAL RESISTANCE

MOUNTING

Thermal data for convection-cooling with a heatsink assumes a vertical mounting of the drive on a thermally non-conducting surface. Heatsink fins run parallel to the long axis of the drive. When fan-cooling is used vertical mounting is not necessary to guarantee thermal performance of the heatsink.

THERMAL RESISTANCE

Thermal resistance is a measure of the temperature rise of the drive heatplate due to power dissipation in the drive. It is expressed in units of °C/W where the degrees are the temperature rise above ambient.

E.g., a drive dissipating 13 W mounted with no heatsink or fan would see a temperature rise of 45 °C above ambient based on the thermal resistance of 3.46 °C/W. Using the drive maximum heatplate temperature of 70 °C and subtracting 46 °C from that would give 24 °C as the maximum ambient temperature the drive in which the drive could operate before going into thermal shutdown. To operate at higher ambient temperatures a heatsink or forced-air would be required.

END VIEWS
VERTICAL MOUNTING

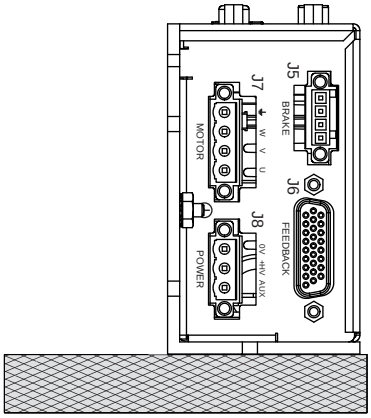

NO HEATSINK, NO FAN	°C/W
CONVECTION	3.46

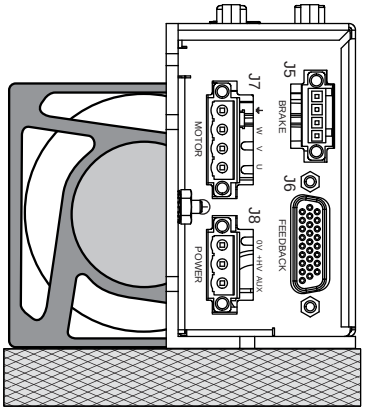

NO HEATSINK + FAN	°C/W
FORCED-AIR, 300 LFM	1.32

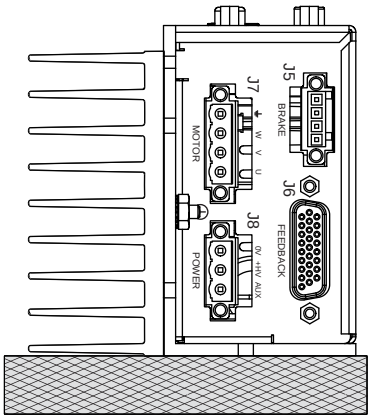

HEATSINK, NO FAN	°C/W
CONVECTION	2.02

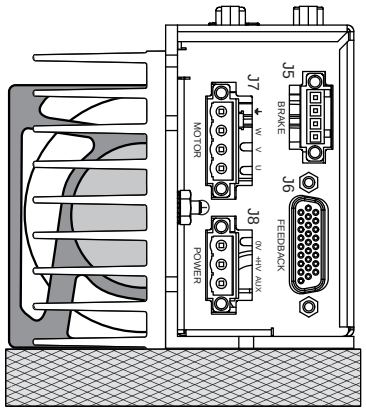

HEATSINK + FAN	°C/W
FORCED-AIR, 300 LFM	0.91

DIMENSIONS: NO HEATSINK

Units: IN[MM]

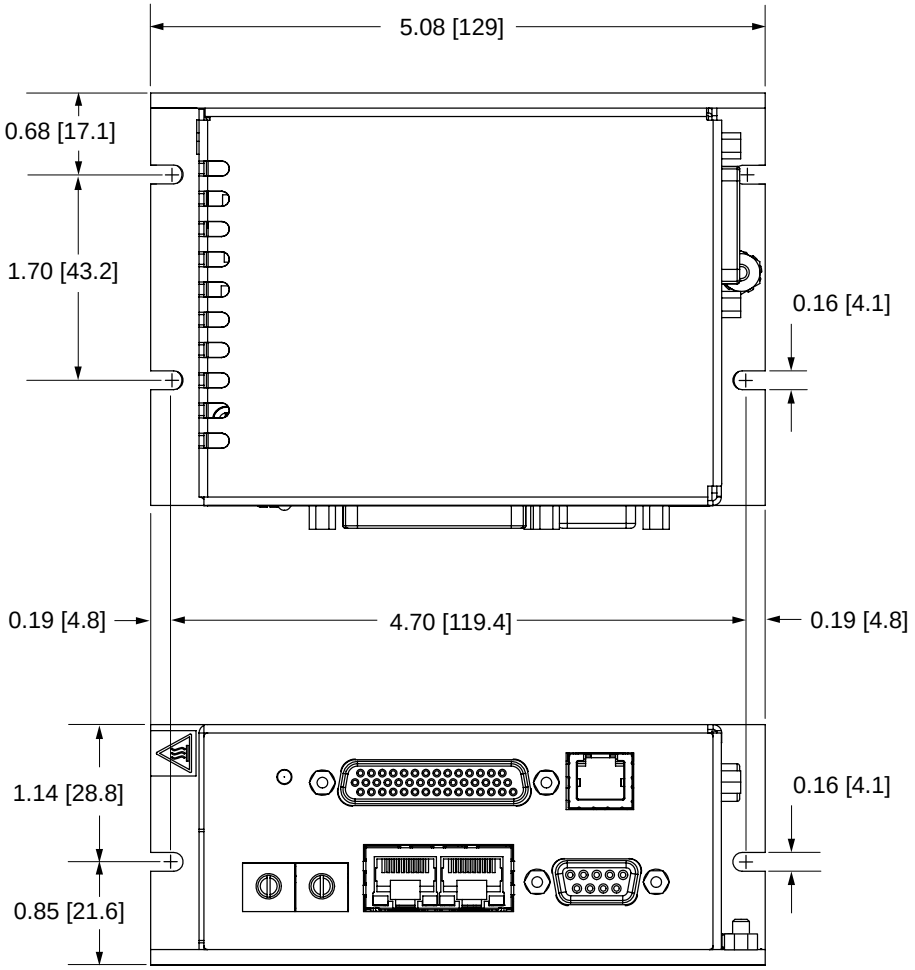

Mounting screws:
#6-32, or 3.5 mm

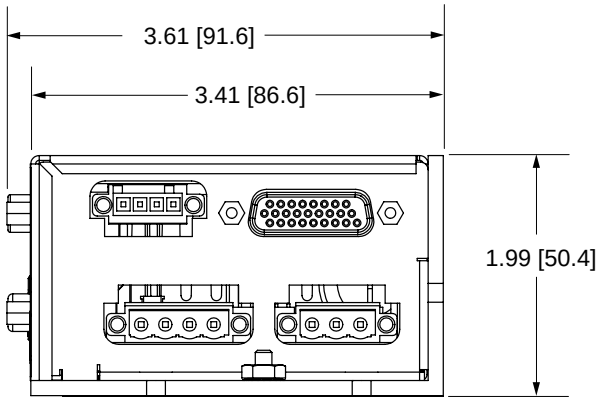

DIMENSIONS: HEATSINK MOUNTED

Units: IN[MM]

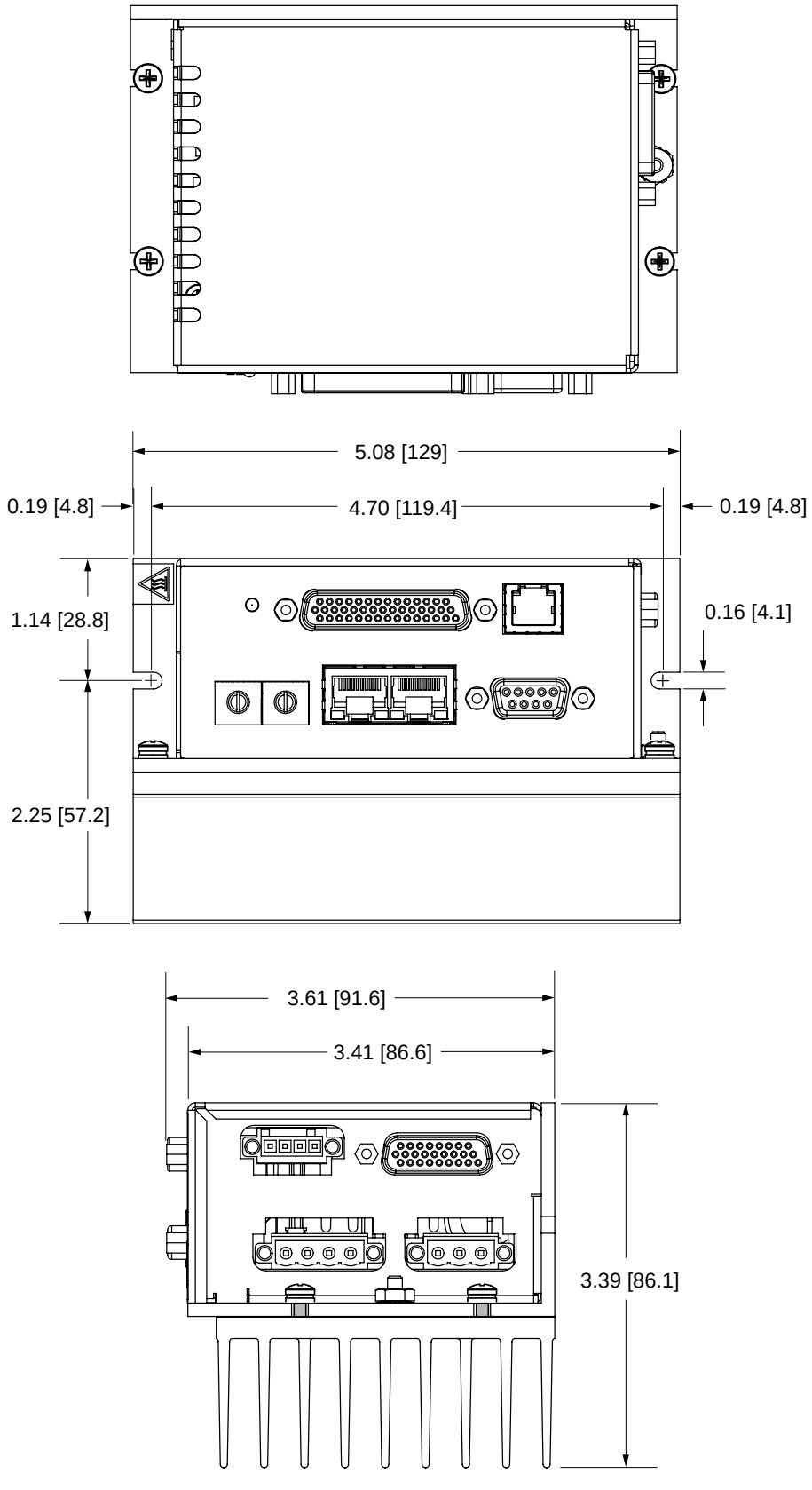

Mounting screws:
#6-32, or 3.5 mm

MASTER ORDERING GUIDE

BPL-090-06	*Accelnet Plus Panel* CANopen servo drive, 3/6 A, 90 Vdc
BPL-090-14	*Accelnet Plus Panel* CANopen servo drive, 7/14 A, 90 Vdc
BPL-090-30	*Accelnet Plus Panel* CANopen servo drive, 15/30 A, 90 Vdc

CANopen®

Add -R to model number for resolver feedback option (Example: BPL-090-14-R)
Add -H to model number for heatsink installed at the factory (Example: BPL-090-06-H)

Example: Order one *Accelnet Plus BPL* drive, resolver version, 7/14 A, with connector Kit, serial cable kit and heatsink fitted at the factory:

Qty	Item	Remarks
1	BPL-090-14-R-H	*Accelnet Plus BPL* servo drive with resolver, and heatsink
1	BPL-CK	*BPL* Connector Kit
1	BPL-SK	Serial Cable Kit

ACCESSORIES

	Qty	Ref	Name	Description	Manufacturer P/N
BPL-CK Connector Kit	1	J8	DC HV	Plug, 3 position, 5.08 mm, female	Wago: 231-303/107-000 (Note 1)
	1			Strain relief, snap-on, 5.08 mm, 3 position, orange	Wago: 232-633
	1	J7	Motor	Plug, 4 position, 5.08 mm, female	Wago: 231-304/107-000 (Note 1)
	1			Strain relief, snap-on, 5.08 mm, 4 position, orange	Wabo: 232-634
	1	J7, J8	Tool	Tool, wire insertion & extraction, 231 series	Wago: 231-159
	1	J5	Brake	Plug, 4 position, 3.5 mm, female	Wago: 734-104/107-000 (Note 1)
	1			Strain relief, snap-on, 3.5 mm, 4 position, grey	Wago: 734-604
	1		Tool	Tool, wire insertion & extraction, 734 series	Wago: 734-231
	1	J4 Note 2	Safety	Connector, DB-9M, 9-position, standard, male	TE/AMP: 205204-4
	9			AMPLIMITE HD-20 Crimp-Snap contacts, 24-20AWG, AU flash	TE/AMP: 66506-9
	1			Metal Backshell, DB-9, RoHS	3M: 3357-9209
	4			Jumper, with pins crimped on both ends	Copley: 10-75177-01
	1	J1	Control	Connector, high-density DB-44M, 44 position, male, solder cup	Norcomp: 180-044-103L001
	1			Metal Backshell, DB-25, RoHS	3M: 3357-9225
	2	J6	Feed-back	Connector, high-density DB-26M, 26 position, male, solder cup	Norcomp: 180-026-103L001
	3			Metal Backshell, DB-15, RoHS	3M: 3357-9215
SER-CK	1	J2	RS-232	Serial Cable Kit	
BPL-NC-10	1	J3	Network	CAN network cable, 10 ft (3 m)	
BPL-NC-01	1			CAM network cable, 1 ft (0.3 m)	

Note 1: For RoHS compliance, append "/RN01-0000" to the Wago part numbers listed above

Note 2: Insertion/extraction tool for J4 contacts is AMP/Tyco 91067-2 (not included in BPL-CK)